CORRESPONDENCE/MEMORANDUM

State of Wisconsin

DATE: September 15, 2003 FILE REF: 3320

TO: All Wisconsin Licensed Well Drillers & Pump Installers

FROM: Mark Putra – WS/2

SUBJECT: Proposed Welding Specifications

At last winter's Continuing Education Seminars we discussed new welding specifications the Department had developed by the Northeastern Wisconsin Technical Institute. We had these specifications created as part of the proposed code revision. They are designed to be used in conjunction with the American Welding Society Manual AWS D10.12 in order to clarify and strengthen the code requirements of Section NR 812.18.

Performing welding jobs according to these specifications will help ensure steel casing pipe and pitless adapters are adequately welded according to the standards of both the American Welding Society and the State Private Well Code.

At the Continuing Education Seminars we had discussions regarding how the Department should best implement these specifications once they become part of the administrative rule (NR 812). We received many suggestions from you. Several of you asked if we could provide copies of these specifications to you. We have placed these specifications here on our Web Site for your inspection.

These specifications include the following:

WDNR-BU2-2G1 (SMAW) Butt Welding **for casing pipe ("Stick" welding)** using 6010/6011& 7018 electrodes (3/17/2000)
WDNR-BU2-2G2 (SMAW) Butt Welding **for casing pipe ("Stick" welding)** using 6010 & 7018 electrodes (3/17/2000)
WDNR-BU2GF-2G (FCAW) **"Flux-cored, wire-feed"** Butt Welding **for casing pipe** using E71TG-G/E71T-8 (NR212, NR203 or NR232 wire; excluding NR211 wire) (3/17/2000)
WDNR-BU2GF-2G (FCAW) **"Flux-cored, wire-feed"** Butt Welding **for casing pipe** using E71TG-G, Lincoln NR212 wire (3/17/2000)
WDNR-BTC-P4-SM (SMAW) **"Stick"** Single Bevel Groove/T-Joint **for pitless adapters** using 7018 electrode (4/19/2002)
WDNR-BTC-P4-GF (FCAW) **"Flux-cored, wire-feed"** Single Bevel Groove/T-Joint **for pitless adapters** using E71TG-G or E71T-X wire, excluding NR211 wire) (4/19/2002).

Please be aware that if you do not have extensive formal training in welding you may find these specification sheets confusing. However, one of the Department's goals of Continuing Education will be to provide training to help you understand what the specifications mean and how they can be met. If you have specific questions about them you may contact Eric Brach at (715) 421-7804.

We will also be asking for additional input from you regarding welding issues in a questionnaire you will be receiving in the next few months.

Printed on Recycled Paper

Wisconsin Dep't Natural Resources

Welding Procedure Specification

WDNR-BU2-2G1

WPS No. WDNR-BU2-2G1 Date 3/17/2000 By _____ Type Manual ☒ Machine ☐

Authorized By _____ Date _____ Revision _____ Semi-Auto ☐ Auto ☐

Welding Process(es) SMAW (Shielded Metal arc Welding) - "Stick Welding" Prequalified ☐

Supporting PQR(s) WDNR-BU2-2G1A

JOINT

Type Butt

Backing Yes ☐ No ☒ Single Weld ☒ Double Weld ☐

Backing Material Backing Weld

Root Opening 1/32-3/32 in Root Face Dimension 1/16-1/8 in.

Groove Angle 60-70deg Radius (J-U) Not Used

Back Gouge Yes ☐ No ☒

Method N/A

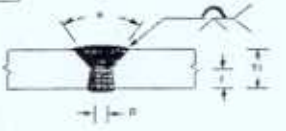

BASE METALS (Pipe to pipe)

Material Spec. ASTM A53 to ASTM A53

Type or Grade Grd B to Grd B

Thickness: Groove (in) 0.187 - Unlimited

Fillet (in) 0.187 - Unlimited

Diameter (Pipe, in) 4.0 - 8.0

POSITION

Position of Groove 2G Fillet 2F

Vertical Progression: ☐ Up ☐ Down

FILLER METALS

AWS Specification A5.1

AWS Classification E6010/6011

ELECTRICAL CHARACTERISTICS

Transfer Mode (GMAW):

Short-Circuiting ☐ Globular ☐ Spray ☐

Current: AC ☐ DCEP ☒ DCEN ☐ Pulsed ☐

Other _____

Tungsten Electrode (GTAW):

Size N/A Type _____

SHIELDING

Flux N/A

Electrode-Flux (Class) F3 & F4

Gas N/A

Composition N/A

Flow Rate N/A

Gas Cup Size N/A

TECHNIQUE

Stringer or Weave Bead Both

Multi-pass or Single Pass (per side) Multiple (Min. of two)

Number of Electrodes 1

Electrode Spacing: Longitudinal N/A

Lateral N/A

Angle N/A

Contact Tube to Work Distance N/A

Peening Not Required

Interpass Cleaning Chip, Brush or Grind

PREHEAT

Preheat Temp., Min. 32 deg F

Thickness	Temperature
Up to 3/4"	32 deg F
Over 3/4" to 1-1/2"	50 deg F
Over 1-1/2" to 2-1/2"	150 deg F
Over 2-1/2"	225 deg F

Interpass Temp., Min. 50 deg F Max. 475 deg F

POSTWELD HEAT TREATMENT

PWHT Required ☐

Temp. Not Required Time _____

WELDING PROCEDURE

Layer/Pass	Process	Filler Metal Class	Diameter	Cur. Type	Amps or WFS	Volts	Travel Speed	Other Notes
Root	SMAW	E6010/6011	1/8	DCEP	80-110Amps	21-28	5-7ipm	
Fill/Cap	SMAW	E7018	1/8	DCEP	135-160Amp	20-27	4-6ipm	

Single-V-groove weld (2)
Butt joint (B)

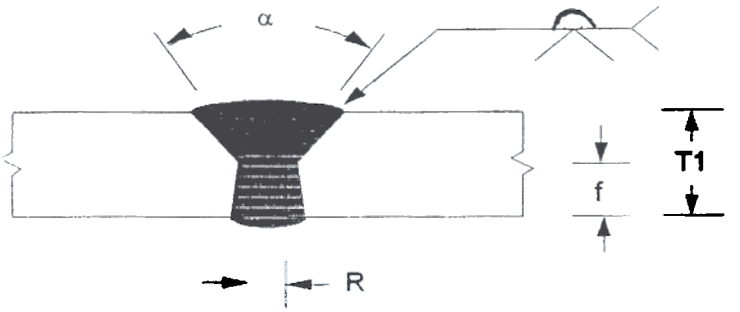

Welding Process	Joint Designation	Base Metal Thickness (U=unlimited)		Groove Preparation			Permitted Welding Positions	Notes
				Root Opening Root Face Groove Angle	Tolerances			
		T1	T 2		As Detailed (see 3.13.1)	As Fit Up (see 3.13.1)		
SMAW	B-U2	U	-	R = 0 to 1/8 f = 0 to 1/8 α = 60°	+1/16, -0 +1/16, -0 +10°, -0°	+1/16, -1/8 Not limited +10°, -5°	All	D, N

MEMO

The root pass may be applied with either 1/8"E6010 or E6011 and shall have the root surface ground, chipped or brushed clean before applying the cover pass with E7018. The maximum root surface reinforcement shall 1/16 in. and the maximum face reinforcement shall be 1/8 inch. The minimum effective throat of the weld shall be equal to the pipe wall thickness. This procedure requires a root pass with E6010 or E6011 having a maximum root layer thickness of 0.210" (including root reinforcement). The fill/cap pass layer is applied using one pass with 5/32 inch E7018 electrode.

Wis. Dep't Natural Resources

Welding Procedure Specification

(For 1/8" Electrode)

WDNR-BU2-2G2

WPS No. WDNR-BU2-2G2 Date 3/17/2000 By _____ Type Manual ☐ Machine ☐

Authorized By _____ Date _____ Revision _____ Semi-Auto ☐ Auto ☐

Welding Process(es) SMAW (Shielded Metal Arc Welding) "Stick Welding" Prequalified ☐

Supporting PQR(s) WDNR-BU2-2G2A

JOINT

Type Butt

Backing Yes ☐ No ☒ Single Weld ☒ Double Weld ☐

Backing Material Backing Weld

Root Opening 1/32-3/32 in Root Face Dimension 1/16-1/8 in

Groove Angle 60-70deg Radius (J-U) Not Used

Back Gouge Yes ☐ No ☒

Method N/A

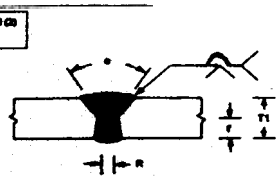

Welding Process	Joint Designation	Base Metal Thickness (Unlimited) T1	T2	Groove Preparation: Root Opening, Root Face, Groove Angle	Tolerances: As Detailed (see 3.13.1)	Tolerances: As Fit Up (see 3.13.1)	Permitted Welding Positions	Notes
SMAW	BU2	U	-	R = 0 to 1/8 f = 0 to 1/8 α = 60°	+1/16, -0 +1/16, -0 +10°, -5°	+1/16, -1/8 Not limited +10°, -5°	All	D, H

BASE METALS (Pipe to pipe)

Material Spec. ASTM A53 to ASTM A53

Type or Grade Grd B to Grd B

Thickness: Groove (in) 3/16

Fillet (in) - Unlimited

Diameter (Pipe, in)

FILLER METALS

AWS Specification A5.1 A5.1

AWS Classification E6010

SHIELDING

Flux N/A

Electrode-Flux (Class) F3 & F4

Gas N/A

Composition N/A

Flow Rate N/A

Gas Cup Size N/A

PREHEAT

Preheat Temp., Min. 32 deg F

Thickness	Temperature
Up to 3/4"	32 deg F
Over 3/4" to 1-1/2"	50 deg F
Over 1-1/2" to 2-1/2"	150 deg F
Over 2-1/2"	225 deg F

Interpass Temp., Min. 50 deg F Max. 475 deg F

POSITION

Position of Groove 2G Fillet N/A

Vertical Progression: ☐ Up ☐ Down

ELECTRICAL CHARACTERISTICS

Transfer Mode (GMAW):

Short-Circuiting ☐ Globular ☐ Spray ☐

Current: AC ☐ DCEP ☒ DCEN ☐ Pulsed ☐

Other _____

Tungsten Electrode (GTAW):

Size N/A Type N/A

TECHNIQUE

Stringer or Weave Bead Stringer

Multi-pass or Single Pass (per side) Multiple

Number of Electrodes 1

Electrode Spacing: Longitudinal N/A

Lateral N/A

Angle N/A

Contact Tube to Work Distance N/A

Peening Not RFequired

Interpass Cleaning Chip, Brush or Grind

POSTWELD HEAT TREATMENT

PWHT Required ☐

Temp. N/A Time N/A

WELDING PROCEDURE

Layer/Pass	Process	Filler Metal Class	Diameter	Cur. Type	Amps or WFS	Volts	Travel Speed	Other Notes
Root	SMAW	E6010	1/8	DCEP	85-110Amps	21-28	5-7ipm	
Fill/Cap	SMAW	E7018	1/8	DCEP	120-140Amp	21-28	5.5-8ipm	

Wis. Dep't Natural Resources

Welding Procedure Specification

WDNR-BU2-2G2

Single-V-groove weld (2)
Butt joint (B)

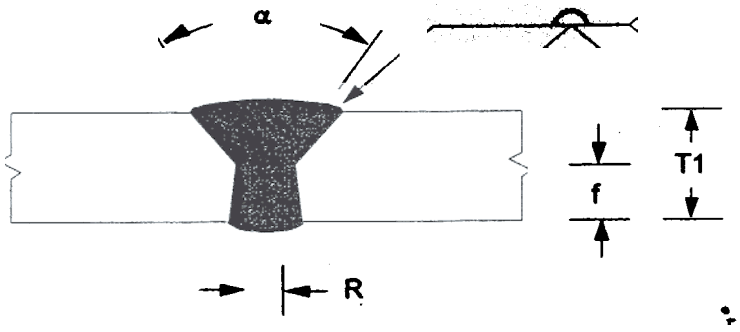

Welding Process	Joint Designation	Base Metal Thickness (U=unlimited) T1	T 2	Groove Preparation: Root Opening / Root Face / Groove Angle	Tolerances: As Detailed (see 3.13.1)	Tolerances: As Fit Up (see 3.13.1)	Permitted Welding Positions	Notes
SMAW	B-U2	U	-	R = 0 to 1/8 f = 0 to 1/8 α = 60°	+1/16, -0 +1/16, -0 +10°, -0°	+1/16, -1/8 Not limited +10°, -5°	All	D, N

MEMO

The root pass may be applied with either 1/8" E6010 or E6011 and shall have the root surface ground, chipped and brushed cleaned before applying the cover pass with E7018. The maximum root surface reinforcement shall be 1/16 in. and the maximum face reinforcement shall be 1/8 inch. The minimum effective throat of the weld shall be equal to the pipe wall thickness. This procedure requires a root pass with E6010 or E6011 having a maximum root layer thickness of 0.210" (including root reinforcement). The fill/cap pass layer is applied using two passes with 1/8 in. E7018 having a maximum thickness of 0.265 (including face reinforcement).

Wis. Dep't of Natural Resources

Welding Procedure Specification

WDNR-BU2GF-2G

WPS No. **WDNR-BU2GF-2G** Date **3/17/2000** By _____ Type Manual ☐ Machine ☐

Authorized By _____ Date _____ Revision _____ Semi-Auto ☒ Auto ☐

Welding Process(es) **FCAW** (Flux-cored arc welding) Prequalified ☐

Supporting PQR(s) **WDNR-BU2GF-2GA** "Continuous feed wire welding"

JOINT

Type **Butt**

Backing Yes ☐ No ☒ Single Weld ☒ Double Weld ☐

Backing Material **Backing Weld**

Root Opening **1/32"-3/32"** Root Face Dimension **1/16"-1/8"**

Groove Angle **60-70deg** Radius (J-U) **Not Used**

Back Gouge Yes ☐ No ☒

Method **N/A**

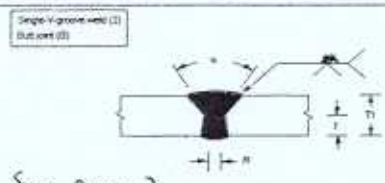

See page 2

Welding Process	Joint Designation	Base Metal Thickness (Unlimited) T1	T2	Groove Preparation: Root Opening, Root Face, Groove Angle	Tolerances: As Detailed (see 3.13.1)	As Fit Up (see 3.13.1)	Permitted Welding Positions	Gas Shielding for FCAW	Notes
FCAW	BUD-GF	U	-	R = 1/16", T1 = 1/8", α = 60°	-1/8", -0°	-	All	Not required	

BASE METALS (Pipe to pipe)

Material Spec. **ASTM A53** to **ASTM A53**

Type or Grade **Grd B** to **Grd B**

Thickness: Groove (in) **0.187** - **0.500**

Fillet (in) **0.187** - **0.500**

Diameter (Pipe, in) **4.0** - **8.0**

FILLER METALS

AWS Specification **A5.20**

AWS Classification **E71TG-G/E71T-8** **NR212,203&232**

SHIELDING

Flux **Low Hydrogen**

Electrode-Flux (Class) **F6**

Gas **N/A**

Composition **N/A**

Flow Rate **N/A**

Gas Cup Size **N/A**

PREHEAT

Preheat Temp., Min. **32 deg F**

Thickness Up to 3/4" Temperature **32 deg F**

Over 3/4" to 1-1/2" **50 deg F**

Over 1-1/2" to 2-1/2" **150 deg F**

Over 2-1/2" **225 deg F**

Interpass Temp., Min. **50 deg F** Max. **475 deg F**

POSITION

Position of Groove **2G** Fillet **2F**

Vertical Progression: ☐ Up ☐ Down

ELECTRICAL CHARACTERISTICS

Transfer Mode (GMAW):

Short-Circuiting ☐ Globular ☐ Spray ☐

Current: AC ☐ DCEP ☐ DCEN ☒ Pulsed ☐

Other _____

Tungsten Electrode (GTAW):

Size **N/A** Type **N/A**

TECHNIQUE

Stringer or Weave Bead **Both**

Multi-pass or Single Pass (per side) **Multipie**

Number of Electrodes **1**

Electrode Spacing: Longitudinal **N/A**

Lateral **N/A**

Angle **N/A**

Contact Tube to Work Distance **3/8"-3/4"**

Peening **Not Required**

Interpass Cleaning **Chip, Brush or Grind**

POSTWELD HEAT TREATMENT

PWHT Required ☐

Temp. **Not Required** Time _____

WELDING PROCEDURE

Layer/Pass	Process	Filler Metal Class	Diameter	Cur. Type	Amps or WFS	Volts	Travel Speed	Other Notes
Root	FCAW	E71TG-G	0.045"	DCEN	140-170A	17-18.5	6.5-10ipm	130-150 ipm WFS
Fill/Cap	FCAW	E71TG-G	0.045"	DCEN	125-160	16.5-18	6-8.5ipm	110-125 ipm WFS

Wis. Dep't of Natural Resources

Welding Procedure Specification

WDNR-BU2GF-2G

Single-V-groove weld (2)
Butt joint (B)

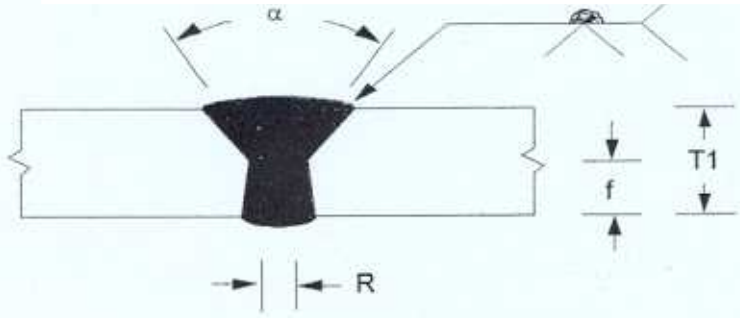

Welding Process	Joint Designation	Base Metal Thickness (U=unlimited) T1	T2	Groove Preparation: Root Opening / Root Face / Groove Angle	Tolerances: As Detailed (see 3.13.1)	Tolerances: As Fit Up (see 3.13.1)	Permitted Welding Positions	Gas Shielding for FCAW	Notes
FCAW	B-U2-GF	U	-	R = 1/32 to 3/32 f = 1/16 to 1/8 α = 60°	+10°, -0°	+10°, -0°	All	Not required	

MEMO

The maximum root surface reinforcement shall be 1/16 in. and the maximum face reinforcement shall be 1/8 inch with a smooth transition to the base metal. The minimum weld effective throat shall be equal to the pipe wall thickness. This procedure does not allow the use of NR211 electrode. NR212 was used to qualify this welding procedure. Alternatively NR203 or NR232 or Hobart E71T-8 (7018) may also be used.

Wis. Dep't of Natural Resources

Welding Procedure Specification

WDNR-BU2GF-2G

Single-V-groove weld (2)
Butt joint (B)

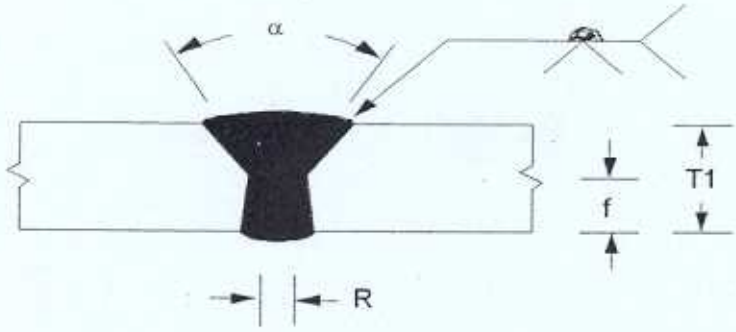

Welding Process	Joint Designation	Base Metal Thickness (U=unlimited)		Groove Preparation			Permitted Welding Positions	Gas Shielding for FCAW	Notes
				Root Opening Root Face Groove Angle	Tolerances				
					As Detailed (see 3.13.1)	As Fit Up (see 3.13.1)			
		T1	T2						
FCAW	B-U2-GF	U	-	R = 1/32 to 3/32 f = 1/16 to 1/8 α = 60°	+10°, -0°	+10°, -0°	All	Not required	

MEMO

The maximum root surface reinforcement shall be 1/16 in. and the maximum face reinforcement shall be 1/8 inch with a smooth transition to the base metal. The minimum weld effective throat shall be equal to the pipe wall thickness. This procedure does not allow the use of NR211 electrode. NR212 was used to qualify this welding procedure. Alternatively NR203 or NR232 or Hobart E71T-8 (7018) may also be used.

Wis. Dep't of Natural Resources

Welding Procedure Specification

WDNR-BU2GF-2G

WPS No. WDNR-BU2GF-2G Date 3/17/2000 By

Type Manual ☐ Machine ☐ Semi-Auto ☒ Auto ☐

Authorized By Date Revision

Welding Process(es) FCAW (Flux-cored arc welding) Prequalified ☐

Supporting PQR(s) WDNR-BU2GF-2GA ("Continuous feed wire welding)

JOINT

Type Butt

Backing Yes ☐ No ☒ Single Weld ☒ Double Weld ☐

Backing Material Backing Weld

Root Opening 1/32"-3/32" Root Face Dimension 1/16"-1/8"

Groove Angle 60-70deg Radius (J-U) Not Used

Back Gouge Yes ☐ No ☒

Method N/A

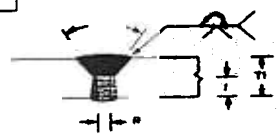

BASE METALS (Pipe to Pipe)

Material Spec. ASTM A53 to ASTM A53

Type or Grade Grd B to Grd B

Thickness: Groove (in) 0.187 0.500

Fillet (in) 0.187

Diameter (Pipe, in) 4.0

FILLER METALS

AWS Specification A5.20

AWS Classification E71TG-G Lincoln NR212

POSITION

Position of Groove 2G Fillet 2F

Vertical Progression: ☐ Up ☐ Down

ELECTRICAL CHARACTERISTICS

Transfer Mode (GMAW):

Short-Circuiting ☐ Globular ☐ Spray ☐

Current: AC ☐ DCEP ☐ DCEN ☒ Pulsed ☐

Other

Tungsten Electrode (GTAW):

Size N/A Type N/A

SHIELDING

Flux Gas N/A

Low Hydrogen Composition N/A

Electrode-Flux (Class) Flow Rate N/A

FB Gas Cup Size N/A

TECHNIQUE

Stringer or Weave Bead Both

Multi-pass or Single Pass (per side) Multiple

Number of Electrodes 1

Electrode Spacing: Longitudinal N/A

Lateral N/A

Angle N/A

Contact Tube to Work Distance 3/8"-1/2"

Peening Not Required

Interpass Cleaning Chip, Brush or Grind

PREHEAT

Preheat Temp., Min. 32 deg F

Thickness	Temperature
Up to 3/4"	32 deg F
Over 3/4" to 1-1/2"	50 deg F
Over 1-1/2" to 2-1/2"	150 deg F
Over 2-1/2"	225 deg F

Interpass Temp., Min. 50 deg F Max. 475 deg F

POSTWELD HEAT TREATMENT

PWHT Required ☐

Temp. Not Required Time

WELDING PROCEDURE

Layer/Pass	Process	Filler Metal Class	Diameter	Cur. Type	Ampe or WFS	Volts	Travel Speed	Other Notes
Root	FCAW	E71TG-G	0.045"	DCEN	140-170A	17-18.5	6.5-10ipm	130-150 ipm WFS
Fill/Cap	FCAW	E71TG-G	0.045"	DCEN	125-160	16.5-18	6-8.5ipm	110-125 ipm WFS

Wis. Dep't of Natural Resources

Welding Procedure Specification

WDNR-BU2GF-2G

Single-V-groove weld (2)
Butt joint (B)

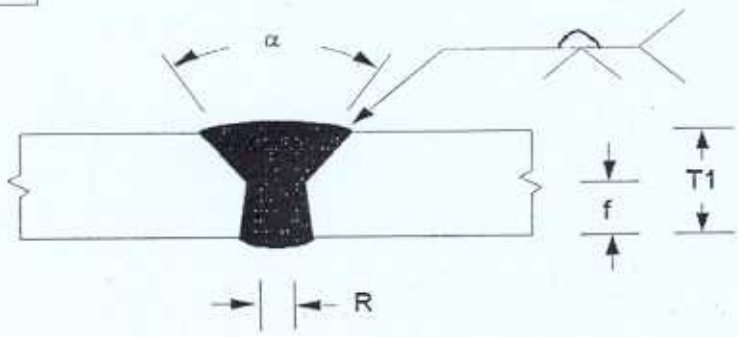

Welding Process	Joint Designation	Base Metal Thickness (U=unlimited)		Groove Preparation			Permitted Welding Positions	Gas Shielding for FCAW	Notes
				Root Opening Root Face Groove Angle	Tolerances As Detailed (see 3.13.1)	Tolerances As Fit Up (see 3.13.1)			
		T1	T2						
GMAW FCAW	B-U2-GF	U	-	R = 0 to 1/8 f = 0 to 1/8 α = 60°	+1/16, -0 +1/16, -0 +10°, -0°	+1/16, -1/8 Not limited +10°, -5°	All	Not required	A N

MEMO

The maximum root surface reinforcement shall be 1/16 in. and the maximum face reinforcement shall be 1/8 inch with a smooth transition to the base metal. The minimum weld effective throat shall be equal to the pipe wall thickness.

Wisconsin Dep't of Natural Resources

Welding Procedure Specification

WDNR-BTC-P4-SM

WPS No. WDNR-BTC-P4-SM Date _____ By _____ Type Manual ☒ Machine ☐

Authorized By _____ Date 4/19/2002 Revision _____ Semi-Auto ☐ Auto ☐

Welding Process(es) SMAW (Shielded metal arc welding - "Stick") Prequalified ☐

Supporting PQR(s) WDNR-BTC-P4-SM-2F WDNR-BTC-P4-SM-4F WDNR-BTC-P4-SM-3F

JOINT

Type Single Bevel Groove/T-Joint

Backing Yes ☐ No ☒ Single Weld ☒ Double Weld ☐

Backing Material N/A

Root Opening None Root Face Dimension 1/8 in. min.

Groove Angle 45 deg Radius (J-U) No

Back Gouge Yes ☐ No ☒

Method _____

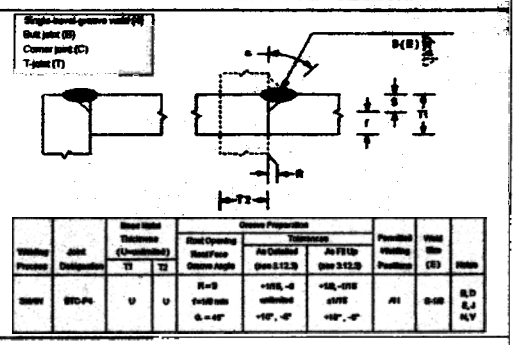

BASE METALS

Material Spec. AWS D1.1 Grp I to Cast Steel (Pitless)

Type or Grade _____ to _____

Thickness: Groove (in) 0.125 - 0.3125

Fillet (in) 0.3125 - 0.4375

Diameter (Pipe, in) 6.0 - 10.0

POSITION

Position of Groove N/A Fillet 2F,3F&4F

Vertical Progression: ☒ Up ☐ Down

FILLER METALS

AWS Specification A5.1

AWS Classification E7018

ELECTRICAL CHARACTERISTICS

Transfer Mode (GMAW):

Short-Circuiting ☐ Globular ☐ Spray ☐

Current: AC ☐ DCEP ☒ DCEN ☐ Pulsed ☐

Other _____

Tungsten Electrode (GTAW):

Size N/A Type N/A

SHIELDING

Flux: Low hydrogen

Electrode-Flux (Class): F4

Gas N/A

Composition N/A

Flow Rate N/A

Gas Cup Size N/A

TECHNIQUE

Stringer or Weave Bead Both

Multi-pass or Single Pass (per side) Multiple

Number of Electrodes 1

Electrode Spacing: Longitudinal N/A

Lateral N/A

Angle N/A

Contact Tube to Work Distance N/A

Peening Not Required

Interpass Cleaning Chip, Brush or Grind

PREHEAT

Preheat Temp., Min. 70 deg F

Thickness	Temperature
Up to 3/4"	70 deg F
Over 3/4" to 1-1/2"	N/A
Over 1-1/2" to 2-1/2"	N/A
Over 2-1/2"	N/A

Interpass Temp., Min. 70 deg F Max. 450 deg F

POSTWELD HEAT TREATMENT

PWHT Required ☐

Temp. Not Required Time _____

WELDING PROCEDURE

Layer/Pass	Process	Filler Metal Class	Diameter	Cur. Type	Amps or WFS	Volts	Travel Speed	Other Notes
Root	SMAW	E7018	1/8	DCEP	115-130	20-22	4.4-7ipm	
	SMAW	E7018	1/8	DCEP	115-140	20.5-23	3-7.5ipm	
	SMAW	E7018	5/32	DCEP	130-160	21-25	3-7 ipm	

Wisconsin Dep't of Natural Resources

Welding Procedure Specification

WDNR-BTC-P4-SM

Single-bevel-groove weld (4)
Butt joint (B)
Corner joint (C)
T-joint (T)

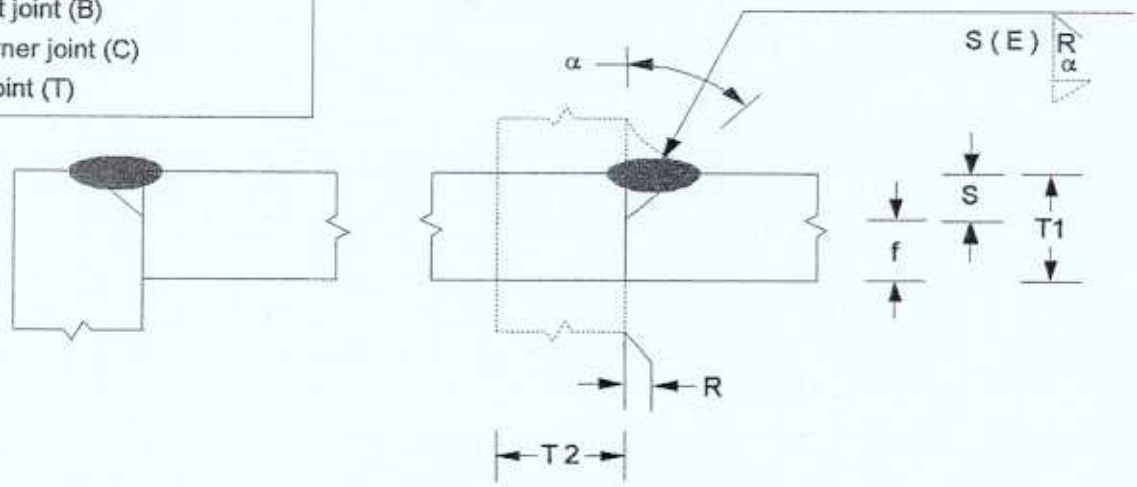

Welding Process	Joint Designation	Base Metal Thickness (U=unlimited) T1	T2	Groove Preparation: Root Opening / Root Face / Groove Angle	Tolerances: As Detailed (see 3.12.3)	Tolerances: As Fit Up (see 3.12.3)	Permitted Welding Positions	Weld Size (E)	Notes
SMAW	BTC-P4	U	U	R = 0 f =1/8 min α = 45°	+1/16, -0 unlimited +10°, -0°	+1/8, -1/16 ±1/16 +10°, -5°	All	S-1/8	B, D E, J N, V

MEMO

This weld procedure was developed for the welding of pitless adapters with the shielded metal arc welding process. The minimum fillet weld size shall be 5/16 in. and shall be applied in two layers.The weld parameters for this procedure were establised using E7018 electrode. This procedure is for welding of fillet welds in all positions using 1/8 or 5/32" electrode. It is recomended that 1/8" be used for the root pass. E7018 low hydrogen electrodes shall be purchased in hermetically sealed containers and after opening shall be stored in ovens held at a temperature of at least 250 deg Fand in accordance with the latest edition of AWS A5.1.

Wisconsin Dep't of Natural Resources

Welding Procedure Specification

WDNR-BTC-P4-GF

WPS No. WDNR-BTC-P4-GF Date _____ By _____ Type Manual ☐

Authorized By _____ Date 4/19/2002 Revision _____ Semi-Auto ☒

Welding Process(es) FCAW (Flux-cored arc welding) (wire-feed) Prequalified ☐

Supporting PQR(s) WDNR-BTC-P4-GF-2F WDNR-BTC-P4-GF-4F WDNR-BTC-P4-GF-3F

JOINT

Type Single Bevel Groove/T-Joint

Backing Yes ☐ No ☒ Single Weld ☒ Double Weld ☐

Backing Material N/A

Root Opening None Root Face Dimension 1/8 in. min.

Groove Angle 45 deg Radius (J-U) No

Back Gouge Yes ☐ No ☒

Method _____

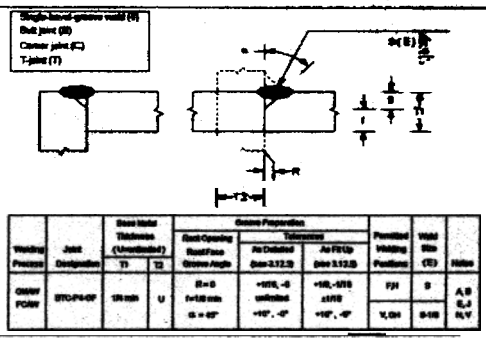

BASE METALS

To pitless

Material Spec. AWS D1.1 Grp I to Cast Steel

Type or Grade _____ to _____

Thickness: Groove (in) 0.125 - 0.3125

Fillet (in) 0.3125 - 0.4375

Diameter (Pipe, in) 6.0 - 10.0

POSITION

Position of Groove N/A Fillet 2F,3F&4F

Vertical Progression: ☒ Up ☐ Down

FILLER METALS

AWS Specification A5.29 A5.20

AWS Classification E71TG-G

excluding NR211

ELECTRICAL CHARACTERISTICS

Transfer Mode (GMAW):

Short-Circuiting ☐ Globular ☐ Spray ☐

Current: AC ☐ DCEP ☐ DCEN ☒ Pulsed ☐

Other _____

Tungsten Electrode (GTAW):

Size N/A Type N/A

SHIELDING

Flux Self Shielded

Electrode-Flux (Class) N/A

Gas N/A

Composition N/A

Flow Rate N/A

Gas Cup Size N/A

TECHNIQUE

Stringer or Weave Bead Both

Multi-pass or Single Pass (per side) Multiple

Number of Electrodes 1

Electrode Spacing: Longitudinal N/A

Lateral N/A

Angle N/A

Contact Tube to Work Distance 3/8-1/2

Peening Not Required

Interpass Cleaning Chip, Brush or Grind

PREHEAT

Preheat Temp., Min. 70 deg F

Thickness	Temperature
Up to 3/4"	70 deg F
Over 3/4" to 1-1/2"	N/A
Over 1-1/2" to 2-1/2"	N/A
Over 2-1/2"	!

Interpass Temp., Min. 70 deg F Max. 450deg F

POSTWELD HEAT TREATMENT

PWHT Required ☐

Temp. Not Required Time _____

WELDING PROCEDURE

Layer/Pass	Process	Filler Metal Class	Diameter	Cur. Type	Amps or WFS	Volts	Travel Speed	Other Notes
Root	FCAW	E71TG-G	0.045	DCEN	122-155A	17-19	4-6ipm	
Cap	FCAW	E71TG-G	0.045	DCEN	125-160	17-19	3-7ipm	

Wisconsin Dep't of Natural Resources

Welding Procedure Specification

WDNR-BTC-P4-GF

Single-bevel-groove weld (4)
Butt joint (B)
Corner joint (C)
T-joint (T)

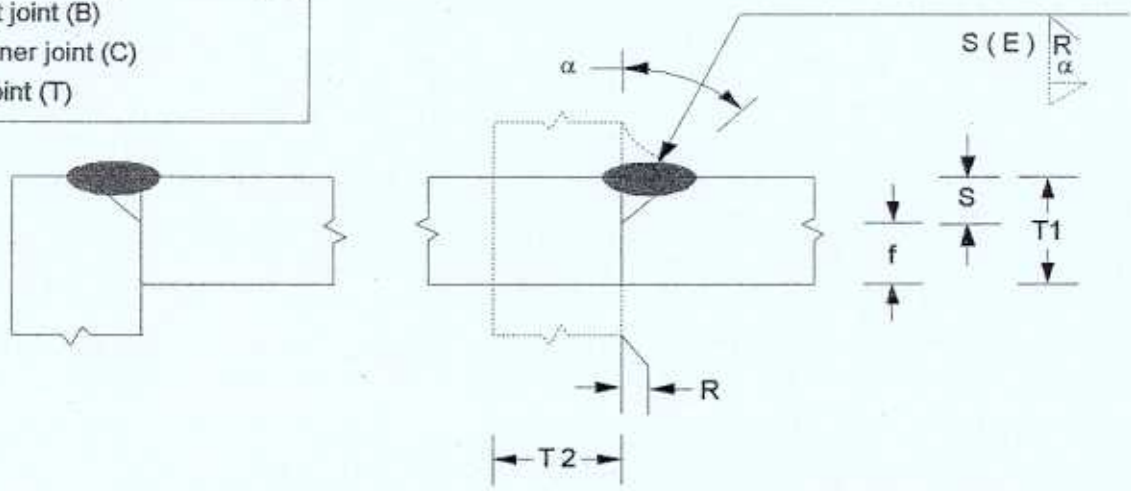

Welding Process	Joint Designation	Base Metal Thickness (U=unlimited) T1	T2	Groove Preparation: Root Opening / Root Face / Groove Angle	Tolerances: As Detailed (see 3.12.3)	Tolerances: As Fit Up (see 3.12.3)	Permitted Welding Positions	Weld Size (E)	Notes
GMAW FCAW	BTC-P4-GF	1/4 min	U	R = 0 f =1/8 min α = 45°	+1/16, -0 unlimited +10° , -0°	+1/8, -1/16 ±1/16 +10° , -5°	F,H	S	A, B E, J N, V
							V, OH	S-1/8	

MEMO

This weld procedure was developed for the welding of pitless adapters with the self shielded flux cored arc welding process. The minimum fillet weld size shall be 5/16 in. and shall be applied in two layers.The weld parameters for this procedure were establised using NR212 E71TG-G and any of the self shielded flux cored electrodes may be used with the execption of NR211. This procedure is for welding of fillet welds in all positions using O.045 dia electrode.