Wisconsin Department of Natural Resources
Wastewater Operator Certification

Advanced General Wastewater Study Guide

July 2012 Edition

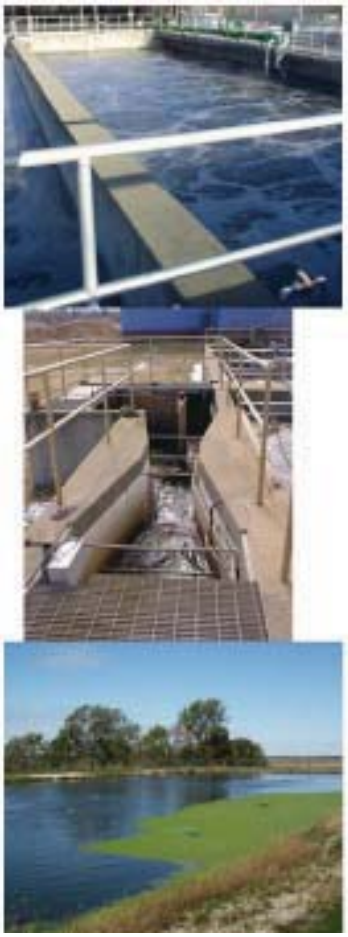

Wisconsin Department of Natural Resources
Bureau of Science Services
Operator Certification Program
P.O. Box 7921, Madison, WI 53707

http://dnr.wi.gov/

The Wisconsin Department of Natural Resources provides equal opportunity in its employment, programs, services, and functions under an Affirmative Action Plan. If you have any questions, please write to Equal Opportunity Office, Department of Interior, Washington, D.C. 20240. This publication is available in alternative format (large print, Braille, audio tape. etc.) upon request. Please call (608) 266-0531 for more information.

PRINTED ON RECYCLED PAPER

Printed on 07/31/12

Preface

This operator's study guide represents the results of an ambitious program. Operators of wastewater facilities, regulators, educators and local officials, jointly prepared the objectives and exam questions for this subclass.

How to use this study guide with references

In preparation for the exams you should:

1. Read all of the key knowledges for each objective.

2. Use the resources listed at the end of the study guide for additional information.

3. Review all key knowledges until you fully understand them and know them by memory.

It is advisable that the operator take classroom or online training in this process before attempting the certification exam.

Choosing A Test Date

Before you choose a test date, consider the training opportunities available in your area. A listing of training opportunities and exam dates is available on the DNR website http://dnr.wi.gov/, search keyword "Operator Certification". It can also be found in the annual DNR "Certified Operator" or by contacting your DNR regional operator certification coordinator.

Acknowledgements

This Study Guide is the result of the efforts of the following workgroup individuals:

Kurt Birkett, Fort Atkinson WWTP
Gary Hanson, AECom
Greg Paul, QLF Specialty Products
Dan Tomaro, Wastewater Training Solutions
Mark Corbett, WDNR-Oshkosh
Amy Schmidt, WDNR-Madison
Jack Saltes, WDNR-Madison

Table of Contents

Chapter 1 - Terminology
- Section 1.1 - Flows and Pollutants pg. 1
- Section 1.2 - Sewer Systems pg. 2
- Section 1.3 - Wastewater Process pg. 3
- Section 1.4 - Safety and Regulations pg. 5

Chapter 2 - Influent Wastewater
- Section 2.1 - Sources pg. 5
- Section 2.2 - Conveyance pg. 6
- Section 2.3 - Characteristics pg. 6
- Section 2.4 - Flow Monitoring pg. 9
- Section 2.5 - Sampling pg. 9

Chapter 3 - Wastewater Treatment
- Section 3.1 - Preliminary Treatment pg. 10
- Section 3.2 - Primary Treatment pg. 15
- Section 3.3 - Secondary (Biological) Treatment pg. 17
- Section 3.4 - Final Clarification pg. 21
- Section 3.5 - Tertiary Treatment pg. 22
- Section 3.6 - Disinfection pg. 22
- Section 3.7 - Ponds and Lagoons pg. 24
- Section 3.8 - Equipment pg. 25
- Section 3.9 - Treatment Plant and Equipment Maintenance pg. 26

Chapter 4 - Biosolids/Sludge - Processing, Handling, and Land Application
- Section 4.1 - Thickening pg. 28
- Section 4.2 - Treatment pg. 30
- Section 4.3 - Dewatering pg. 31
- Section 4.4 - Land Application pg. 33
- Section 4.5 - Sampling and Reporting pg. 33

Chapter 5 - Effluent Discharge
- Section 5.1 - Flow Monitoring pg. 34
- Section 5.2 - Sampling pg. 34
- Section 5.3 - Permitting and Reporting pg. 35

Chapter 6 - Safety
- Section 6.1 - Management of Wastewater Treatment Plants pg. 36

Table of Contents

Chapter 7 - Calculations

Section 7.1 - Sampling	pg. 37
Section 7.2 - Tank Volume	pg. 37
Section 7.3 - Pounds Formula	pg. 38
Section 7.4 - Pump Rate	pg. 39
Section 7.5 - Detention Time	pg. 40
Section 7.6 - Percent Removal	pg. 40

Chapter 1 - Terminology

Section 1.1 - Flows and Pollutants

1.1.1 Influent

Wastewater entering a treatment plant (raw sewage).

1.1.2 Effluent

Treated wastewater discharged from a treatment plant to the environment.

1.1.3 Biochemical Oxygen Demand (BOD)

A test that measures the organic strength of a sample by measuring the amount of oxygen consumed.

1.1.4 Total Suspended Solids (TSS)

A test that measures the total amount of solids suspended in a sample.

1.1.5 pH

A measure of the acidity or alkalinity of a sample on a scale of 0-14 (acidic-alkaline). pH 7 is neutral.

1.1.6 Dissolved Oxygen (DO)

A measure of the amount of oxygen dissolved in water.

1.1.7 Gallons per Minute (gpm)

A common measurement of wastewater flow expressed as the number of gallons flowing each minute (gpm).

1.1.8 Gallons per Day (gpd)

A common measurement of wastewater flow expressed as the number of gallons flowing each day (gpd).

1.1.9 Million Gallons per Day (MGD)

A common measurement of wastewater flow in a treatment plant, expressed as millions of gallons of wastewater flowing each day (MGD).

1.1.10 Milligrams per Liter (mg/L)

The concentration of a substance in a liquid expressed as a weight in milligrams per liter of volume (mg/L). Milligrams per liter is the same as parts per million (ppm).

1.1.11 Composite Sample

A sample prepared by combining a number of grab samples, typically over a 24 hour period.

1.1.12 Grab Sample

A single sample taken at a particular time and place that is representative of the current

conditions.

1.1.13 Weir

A weir is a level control structure used to provide uniform flow.

1.1.14 Flume

A restriction in an open channel used to measure flow.

1.1.15 Septage

A high strength waste pumped out of septic tanks, sometimes disposed at WWTPs.

1.1.16 Hydraulic Retention Time (HRT)

The period of time that wastewater remains in a tank. This term is also known as detention time.

1.1.17 Eutrophication

The process of excessive growth of plant and algae in receiving waters due to dissolved nutrients and their decomposition.

1.1.18 Sludge Age

Sludge age is the theoretical length of time a particle of activated sludge stays in the treatment plant, measured in days. In an activated sludge plant, sludge age is the amount (lbs) of mixed liquor suspended solids divided by the suspended solids, or excess cell mass, withdrawn from the system per day (lbs per day of waste activated sludge).

1.1.19 Food to microorganism ratio (F:M or F/M)

Food to microorganism ratio (F:M or F/M) is the amount of food (BOD) provided to the microorganisms (MLVSS or MLSS) in the aeration basins.

Section 1.2 - Sewer Systems

1.2.1 Inflow/Infiltration (I/I)

Any unwanted clearwater that leaks into a collection system. Generally it consists of groundwater, rainwater, or snowmelt.

1.2.2 Sanitary Sewer (Collection System)

An underground pipe system used to convey wastewater to a treatment facility.

1.2.3 Storm Sewer

An underground pipe system that collects rainwater from streets and conveys it to a place other than the wastewater treatment plant.

1.2.4 Combined Sewer

Pipe conveyances that carry both wastewater and storm water in a single pipe. During dry weather conditions, combined sewers discharge to a wastewater treatment plant. During

wet weather conditions, combined sewers used to discharge directly to a water body; now the extra wet weather volume is stored until it can be returned to the wastewater treatment plant.

1.2.5 Lift Stations

An underground chamber with pumps that is used to elevate (lift) wastewater to a higher grade. Lift stations are located within a collection system.

1.2.6 Manhole

A manhole is a structure that provides access to a sewer system. They usually are a round opening with an iron lid.

1.2.7 Wet Well

A wet well is a tank where wastewater is collected. The wastewater is then pumped from the wet well. Wet wells are commonly found in lift stations and at the headworks of the wastewater treatment plant.

1.2.8 Sanitary Sewer Overflow (SSO)

Sanitary sewer overflow is a release of wastewater from a sewage collection system or an interceptor sewer directly into a water of the state or to the land surface. It is commonly referred to as a "SSO".

Section 1.3 - Wastewater Process

1.3.1 Microorganism

A living organism too small to be seen with the naked eye but is visible under a microscope such as a bacteria, viruses, fungi, or protozoa.

1.3.2 Sidestreams

A flow generated within the plant, usually from solids processing, that then is recycled back through the plant.

1.3.3 Aerobic (oxic) [O2]

A condition in which free and dissolved oxygen is available in an aqueous environment.

1.3.4 Anaerobic (septic) [Ø]

A condition in which free, dissolved, and combined oxygen is unavailable in an aqueous environment.

1.3.5 Anoxic

A condition in which oxygen is only available in a combined form such as nitrate (NO3-), nitrite (NO2-), or sulfate (SO4-2) in an aqueous environment.

1.3.6 Treatment Process

A treatment process means a physical, biological, or chemical action that is applied to

wastewater to remove or reduce pollutants.

1.3.7 Treatment Unit

A treatment unit is an individual structure or equipment within a sewage or wastewater treatment facility that is part of a treatment process.

1.3.8 Selector

A selector is part of the treatment system that selects for a specific type of microorganism by providing an environment (anaerobic, anoxic, aerobic) that favors its growth.

1.3.9 Preliminary Treatment

A treatment process consisting of screening and grit removal before the wastewater flows on to other treatment processes.

1.3.10 Primary Treatment

A treatment process that usually consists of clarification by solid-liquid separation that removes a substantial amount of suspended and floating matter.

1.3.11 Secondary Treatment

A treatment process that uses biological processes utilizing bacteria to remove pollutants.

1.3.12 Tertiary Treatment

A wastewater treatment process that uses physical, chemical, or biological processes to remove suspended solids and nutrients to a level that is greater than what can be achieved by secondary treatment.

1.3.13 Headworks

Headworks is the beginning, or head, of a treatment plant where influent flow is measured and sampled and where preliminary treatment occurs.

1.3.14 Grit

The fine abrasive particles removed from wastewater, such as sand and eggshells.

1.3.15 Screenings

The materials in wastewater that are removed on screens at the headworks of treatment plants, such as sticks, stones, plastics, and personal hygiene products.

1.3.16 Aeration Basin

A tank in which wastewater is aerated to achieve biological treatment.

1.3.17 Clarifier

A circular or rectangular tank used to remove floatable and settleable solids in wastewater.

1.3.18 Disinfection

A process used to destroy most pathogens in the effluent to a safe level. Disinfection does

not destroy all microorganisms.

1.3.19 Biosolids

The nutrient-rich, organic byproduct of a wastewater treatment plant that is utilized as fertilizer.

1.3.20 Process Control

The tools and methods used to optimize treatment plant operations.

1.3.21 Return Activated Sludge (RAS)

The settled activated sludge (biomass) that is collected in a secondary clarifier and returned to the secondary treatment process to mix with incoming wastewater. This returns a concentrated population of microorganisms back into the aeration basin.

1.3.22 Waste Activated Sludge (WAS)

The activated sludge (excess biomass or cell mass) removed from the secondary treatment process. For most treatment plants, this will be a portion of the Return Activated Sludge (RAS) flow stream.

Section 1.4 - Safety and Regulations

1.4.1 Confined Space

A space that is large enough for an operator to enter and perform assigned work. It has limited or restricted means for entry or exit and is not designed for continuous occupancy.

1.4.2 Pathogens

Infectious microorganisms in wastewater that pose health risks.

1.4.3 Wisconsin Pollutant Discharge Elimination System (WPDES) Permit

A Wisconsin Pollutant Discharge Elimination System permit is issued to wastewater facility owners, and contains facility effluent and biosolids/sludge limitations, conditions, and reporting requirements.

1.4.4 Discuss where a wastewater treatment plant operator would find information on conducting wastewater tests.

The most authoritative source for conducting wastewater testing can be found in Standard Methods for the Examination of Water and Wastewater, prepared and published jointly by the American Public Health Association, American Water Works Association and Water Environment Federation. It is commonly referred to simply as Standard Methods. The first edition was published in 1905 and many editions have since been published as information is updated and instrumentation/methodologies change.

Chapter 2 - Influent Wastewater

Section 2.1 - Sources

2.1.1 There are currently no key knowledges for this section.

Section 2.2 - Conveyance

2.2.1 Describe a wet well lift station.

A wet well lift station is a single chamber that collects wastewater. This type of lift station is commonly called a submersible lift station due to the pump and motor being completely submerged in the wetwell. The submersible centrifugal pump is watertight, and normally controlled by float switches. They are made to be easily removed for cleaning and maintenance using a rail system.

2.2.2 Explain how a wetwell/drywell pumping station works.

In wetwell/drywell lift stations, the centrifugal pumps and other equipment are located in a separate chamber (drywell), with only the suction pipe being submersed in the wetwell. The pump is turned on when the wastewater reaches a certain depth. If the wastewater continues to rise, more pumps will be turned on. The pumps are turned off when the wetwell is empty. It is important that the drywell be well ventilated and dehumidified to protect the equipment and ensure the safety of the operator.

2.2.3 Describe sanitary sewer overflows (SSOs) and their causes.

Sanitary sewer overflows occur for many different reasons. One of the main reasons sewers back-up and overflow is that too much clearwater gets into the sewer pipes through infiltration or inflow (I/I) during wet weather events. Sewer pipes are designed for only a certain flow capacity and excessive I/I can exceed that capacity. As sewers age, sewer defects increase, allowing for more clearwater (I/I) to get into them. Other circumstances that can cause an overflow are power outages, plugged sewers due to grease or large objects, broken or collapsed pipes, equipment failure such as a lift station pump, or widescale flooding.

Section 2.3 - Characteristics

2.3.1 Describe the nutrient characteristics of influent domestic wastewater.

Sewage is >99% water. It is gray in color and has an earthy, musty odor. Typical influent wastewater concentrations are:

Figure 2.3.3.1

Courtesy of Wisconsin Rural Water Association (WRWA)

POLLUTANT	CONCENTRATION [mg/L]
BOD	250
TSS	300
Total Nitrogen	40
Ammonia	25
Total Phosphorus	9
Fats, Oil, and Grease (FOG)	100
pH	6.5-8.0

2.3.2 Discuss the wastewater characteristics and problems with industrial processes.

A. Dairy Operations

Many different types of dairy and whey products are produced in Wisconsin. Some dairy operations have their own wastewater treatment plant but many discharge to the wastewater treatment plant in the community they are located. Industrial wastes from dairy facilities consist of various dilutions of milk that enter the municipal sewage system. One of the largest sources of dairy wastewater come from washwaters and rinse waters of dairy tanks, trucks, equipment, pipelines, and floors. Dairies use clean-in-place (CIP) systems that alternate acid and caustic cleaners and rinses in the cleaning of tanks, equipment, and pipes. pH can thus be high or low. Milk and milk solids have a very high biochemical oxygen demand (BOD). BODs can range from 1,000-10,000 mg/L. Milk wastes also contain high amounts of nitrogen, phosphorus, and chlorides. The volume and BOD of dairy wastewater can vary greatly over a 24 hour period, therefore the collection and equalization of dairy wastewater is very important so that the flow and BOD discharges to the sewer system are more uniform. Sometimes dairy wastes have to be pretreated before discharge to a sanitary sewer. A wastewater treatment plant can be upset if it receives variable loads, high strength wastes, high or low pH discharges, or slug loads from a dairy facility.

B. Food Industry

Food (meats, canned foods, snacks, etc) is processed in many different ways and the wastes from them can vary. Because wastewaters can be variable and are usually high in BOD, suspended solids, nitrogen compounds, phosphorus, chlorides, and vary in pH, it is important for operators to know the wastewaters that come from food processors in their community. Sometimes these wastes have to be equalized or even pretreated before they can be discharged to a sewer system.

C. Breweries

Wisconsin is known for its many breweries and microbreweries. Brewery wastewater typically has a high concentration of biochemical oxygen demand from the carbohydrates and protein from brewing beer and in the cleaning of brewery vessels, pipes, and equipment. Brewery wastewater can have a BOD of 1,000-4,000 mg/L, TSS from 200-1,000 mg/L, nitrogen 25-80 mg/L, phosphorus 1-50 mg/L, and a pH of 4-12. The volume and BOD of brewery wastewater can vary greatly over a 24 hour period, therefore the collection and equalization of brewery wastewater is very important so that the flow and BOD discharges to the sewer system are more uniform.

D. Metal Finishing

Metal finishing wastewater has very little BOD associated with it, but has pollutants that can be toxic to fish and aquatic life, even in small concentrations, as well as wastewater treatment plant microorganisms. They are not readily removed by conventional secondary biological treatment methods. Cleaning and coating operations can result in wastewater with pHs from 1-12 and wastewater can contain phosphates and toxic materials such as chromate, cyanide and metals. Many metal finishing industries have federal or state pretreatment requirements before they can discharge their waste to a sanitary sewer system. Metals can concentrate in treatment plant sludges and therefore metals in sludges must be analyzed and reported to the DNR on sludge characteristic reports. Sludge with high metals concentrations are prohibited and/or restricted in the rate of application due to potential toxicity and/or soil accumulation concerns.

2.3.3 Discuss the impact cleaning agents and products can have on a wastewater treatment plant.

Cleaning products and sanitizers have widespread use in the community. They are important in ensuring public health. When used frequently and in large quantities at industries, businesses, schools, nursing homes, medical facilities, or restaurants they have the potential to affect a treatment plant. Many effective cleaners contain phosphates and thus can contribute a lot of phosphorus to wastewater. Wastewater treatment plants with phosphorus limits, and especially those with stringent limits, will have to remove nearly all this phosphorus. While ammonia is a very effective cleaning agent, quaternary ammonium compounds (commonly known as "quats") can have toxic effects at a treatment plant. Ammonia-based cleaning products also contribute ammonia to the wastestream, which will need to be removed since ammonia can be toxic to fish and aquatic life. Surfactants can interfere and keep solids from settling in clarifiers as well as create foam in aeration basins.

2.3.4 Discuss the impact fats, oils, and grease (FOG) can have on a sewer system and wastewater treatment plant.

Fats, oils, and grease are waste byproducts of cooking. They are found in meats, dairy products, cooking oils, shortenings, food scraps, and sauces. If washed down the drain, or through unmaintained grease traps at restaurants or institutions, they collect and can form grease plugs in sewer pipes. The most common cause of sewage overflows from sewer pipes are blockages caused by grease. If grease makes its way to the treatment plant, it can plug valves, meters and pipes at the plant. It floats to tank surfaces and can create settling problems. Grease can also favor the growth of filamentous organisms that create surface foam and scum. Grease can involve costly and unpleasant clean-ups.

The best practice for controlling grease is keeping it out of the sewer system in the first place by having a Grease Control Program in a community. A Grease Control Program usually involves regular inspections of restaurant and institutional (nursing home, hospital, and school kitchens) grease traps or interceptors and an ongoing information & education program with residents and businesses.

2.3.5 Discuss control measures necessary for industrial discharges.

A. Enforce sewer use ordinances
B. Effective communication with industry
C. Grease control program
D. Monitoring

2.3.6 Describe the types of materials prohibited from discharge into sewer systems, and the reasons they should not be discharged.

The materials with the characteristics listed below are generally prohibited from discharge to the sewer system. These prohibitions are included in local sewer use ordinances. Generally, materials that can interfere with wastewater treatment; or pass through the treatment system and cause a water quality violation; or accumulate in sludges making the sludges toxic or hazardous, are prohibited. Many of the industrial materials can be handled with proper pretreatment or segregation of waste streams that cannot be pretreated.

A. Volatile organics, such as gasoline or solvents that can cause an explosive atmosphere in the sewer system or at the treatment plant.

B. Heavy metals, such as chromium, zinc, copper, nickel, and cadmium are very toxic and can cause a treatment plant upset, pass through the plant or accumulate in the sludge.

C. Acidic and alkaline wastes that can damage the sewer system or upset the treatment plant. Generally, pH's lower than 5.0 or greater than 10.0 should be neutralized prior to discharge to the sewer system.

D. Fats, Oils, and Grease (FOG) must be controlled at industrial and commercial sources with oil separators and grease traps to prevent maintenance problems in wet wells and at the treatment plant.

E. High strength loadings of BOD or suspended soils that could organically overload the treatment plant. This would especially be a problem with "batch" dumping that would cause large slug loads. Any "batch" type operation should be handled by flow equalization to prevent plant upsets.

F. High temperature wastewaters that could affect biological activity.

G. Any solid or viscous materials that could cause sewer blockages.

H. Any debris such as rags or other materials that could cause sewer blockages or pump clogging.

I. Any other toxic materials that impair or interfere with the treatment process.

Section 2.4 - Flow Monitoring

2.4.1 List flow measuring applications in a wastewater treatment plant.

While flow monitoring is required in WPDES permits for measuring influent and effluent flows, flow measurements are needed in many other places within the plant for proper process control. In an activated sludge plant, measuring return and waste activated sludge is extremely important as they are the key to successful operations. In-plant flow meters are used for measuring:

A. Return activated sludge (RAS)
B. Waste activated sludge (WAS)
C. Recycle or recirculation flows
D. Sidestream flows
E. Sludge flows to digesters
F. Sludge feed rates to sludge dewatering equipment
G. Sludge withdrawal volumes from storage tanks

Section 2.5 - Sampling

2.5.1 Describe how flow proportional sampling works.

Flow proportional sampling is the most representative method of collecting wastewater samples for wastewater coming into and being discharged from a treatment plant on a continuous basis. For most treatment plants in Wisconsin, flow proportional sampling is a permit requirement. The samples collected are based on the flow. It is accomplished by having a flow meter send a signal to an automatic composite sampler. The sampler is programmed to collect a certain sample volume per unit volume of flow (flow pulse interval). For instance, the sampler may take a 50 mL sample every 10,000 gallons of flow.

It is better to take a small sample more often than it is to take a large sample less often. As a starting point in programming the sampler correctly, make sure a sample is collected at least every 10-15 minutes (4-6 samples every hour) during the peak flow period of the day, such as in the morning of a normal work day. For instance, if a peak hourly flow of 60,000 gallons flows into the plant between 8 am - 9 am, the sampler should be programmed to take a sample every 10,000-15,000 gallons of flow (60,000 gallons per hour/6 samples per hour = 10,000 gallons/sample). Conversely, in the middle of the night when flows may drop to only 10,000-20,000 gallons per hour, the flow proportional sampler will only collect 1-2 samples in an hour. The volume of sample collected each flow pulse interval should be adjusted, as a general rule, to fill at least 1/4 to 1/2 of the compositing container in 24 hours during average flows. This will allow the container to fill, without overfilling, during wet weather periods when daily flows increase 2-4 times the average flow. If peak flows are higher than this, then the sample volume will have to be reduced during wet weather so as to not overfill the container and have it shut off. A flow proportional sample MUST sample during a full 24 hour period, even during wet weather peak flows.

Chapter 3 - Wastewater Treatment

Section 3.1 - Preliminary Treatment

3.1.1 Describe common equipment used in preliminary treatment.

The purpose of preliminary treatment is to remove larger materials (rags, sticks, stones, plastics, personal hygiene products, etc.) and grit from the wastestream before it flows to downstream treatment units.

Preliminary treatment equipment primarily consists of screening and grit removal systems. Septage handling, grinders, odor control, and flow equalization are also considered preliminary treatment.

A. Screening

Common screening systems are manually cleaned bar screens, mechanically cleaned bar screens, and rotary fine screens. These processes simply remove debris which is then land filled.

B. Grit Removal

Common grit removal systems are aerated grit chambers and vortex-type (Pista®). An aerated grit chamber uses air that separates light from heavier solids (grit). A vortex-type

(Pista®) unit consists of a cylindrical tank creating a vortex flow in which the heavier grit settles to the bottom.

Figure 3.1.1.1

MANUALLY CLEANED BAR SCREEN

Figure 3.1.1.2

MECHANICALLY CLEANED BAR SCREEN

Courtesy of General Mechanical Works

Figure 3.1.1.3

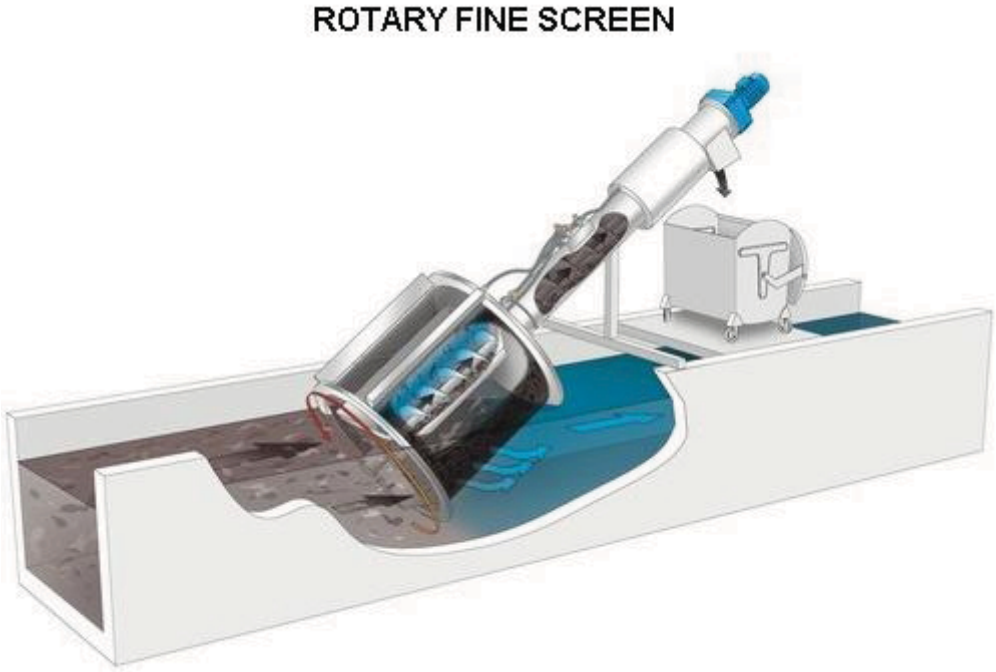

Courtesy of ROTAMAT

3.1.2 Discuss how an aerated grit chamber works.

Raw wastewater is introduced into the end of an aerated grit chamber, which is typically rectangular in shape. Injected air creates a spiral flow of wastewater as it moves through the chamber. As the flow velocity diminishes along the tank, heavier grit particles gradually settle from the water. The settled solids are typically gathered at the tank bottom by a rake mechanism and removed by pumping.

Figure 3.1.2.1

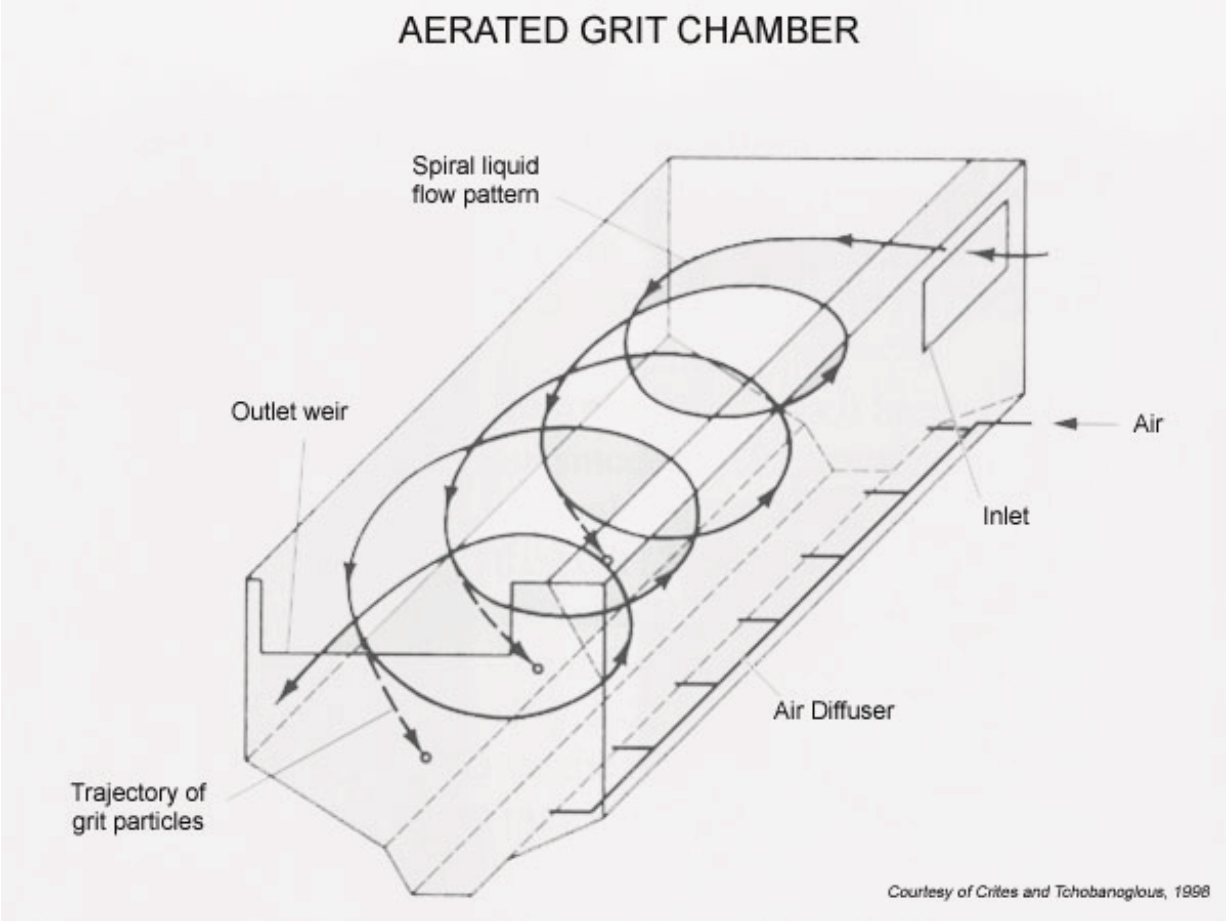

3.1.3 Discuss how a vortex-type (Pista®) grit chamber works.

Raw wastewater is introduced along the side of a cylindrical tank designed for vortex flow. The water and grit combination rotates slowly around the vertical access of the tank. The flow spirals gradually down the tank perimeter, allowing the heavier solids to settle to the tank bottom where they are then removed.

Figure 3.1.3.1

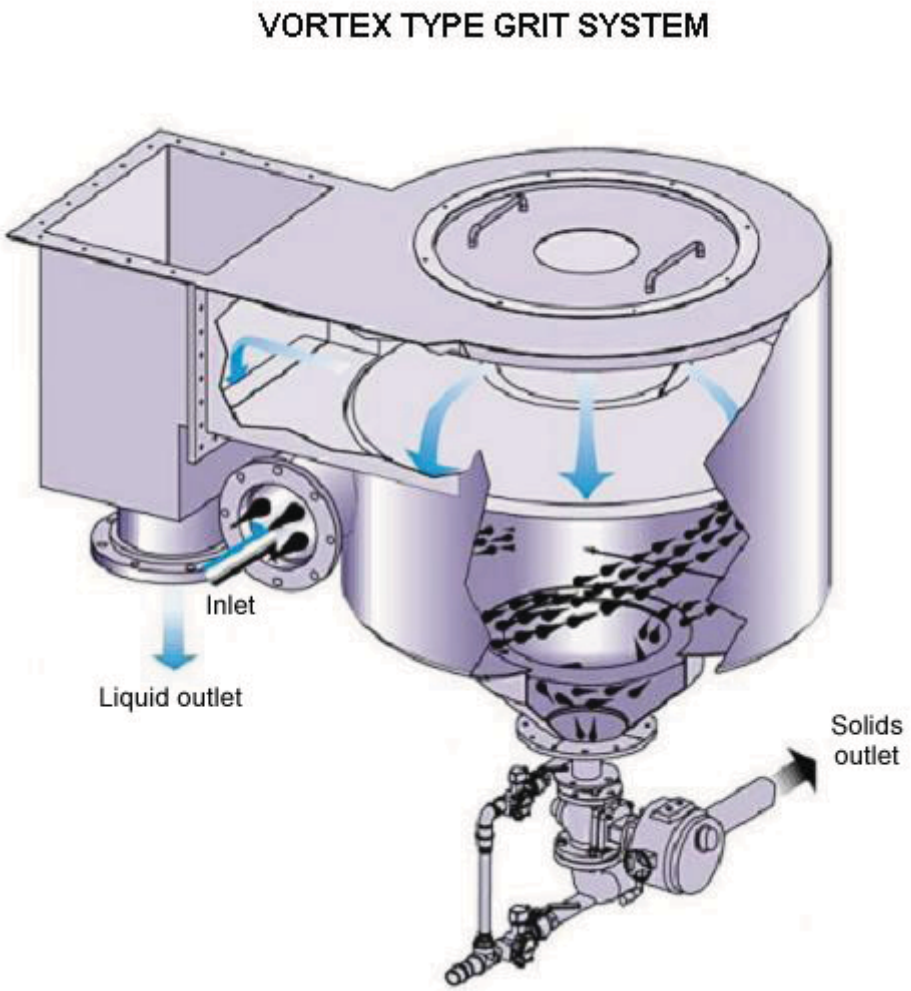

Section 3.2 - Primary Treatment

3.2.1 Describe common equipment used in primary treatment.

The purpose of primary treatment is to settle wastewater solids and capture floatable substances (such as oil & grease). Well designed and operated primary facilities can expect removal efficiencies of 60-75% for suspended solids and 20-35% for BOD.

Common primary treatment units are rectangular clarifiers, circular clarifiers, and dissolved air flotation.

Figure 3.2.1.1

RETANGULAR CLARIFIER

The flow enters one end of the tank, where a baffle directs it downward. The flow exits the other end of the tank over the effluent weir. Two chains run along the edges for the length of the tank. Flights (wooden or fiberglass boards) are attached between the chains, half submerged. A motor slowly moves the chains, and the flights push the scum to the end of the tank, where it is skimmed off. The chains then travel to the bottom of the tank where the flights push settled sludge to the other end of the tank, where the sludge is removed. The (relatively) clear liquid overflows to secondary treatment.

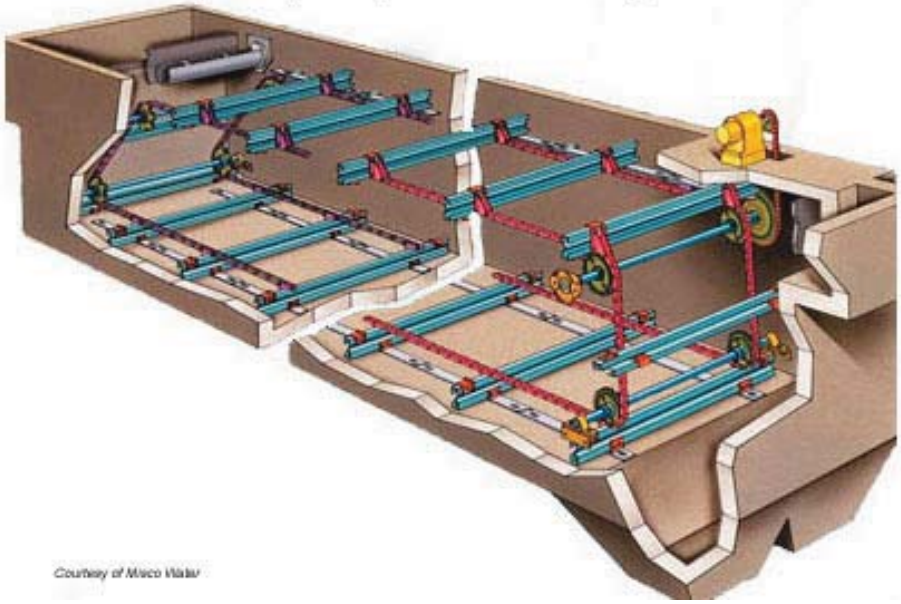

Courtesy of Misco Water

Figure 3.2.1.2

CIRCULAR CLARIFIER

The flow enters the center of the tank and is directed downward by a cylindrical baffle. The wastewater moves outward from the baffle to the overflow weir around the tank perimeter. A central drive unit moves the skimmer arm around the surface to a scum hopper, where scum is removed. The drive unit also moves a scraper arm around the bottom of the tank, pushing settled sludge to a sludge hopper, where sludge is removed. The (relatively) clear liquid overflows to secondary treatment.

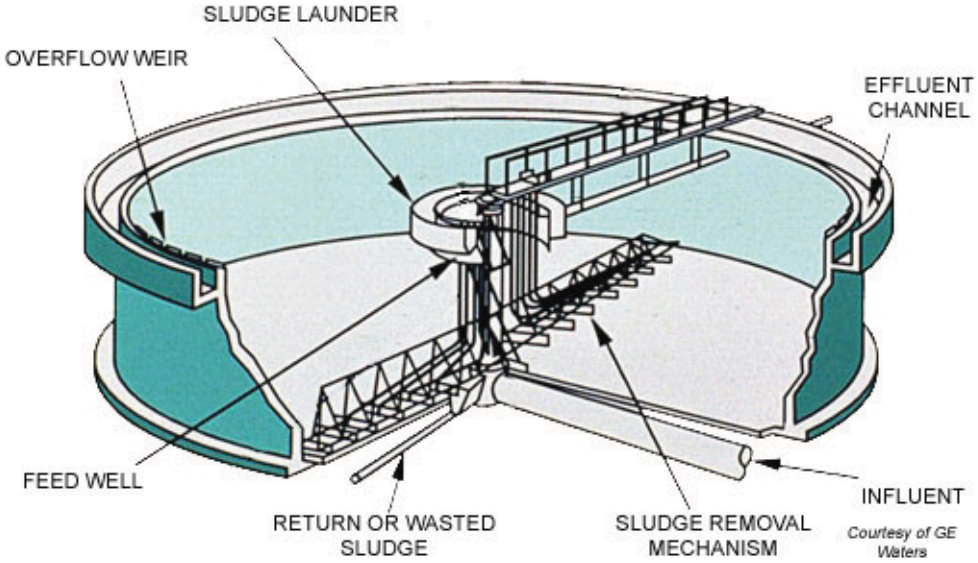

Courtesy of GE Waters

Figure 3.2.1.3

DISSOLVED AIR FLOTATION

Some industries use DAF for primary treatment. The wastewater is injected with air under pressure, and then enters the DAF tank. This releases tiny bubbles, which attach to sludge particles and float them to the surface. The layer of floating solids is skimmed off the tank, and (relatively) clear water flows out under a baffle.

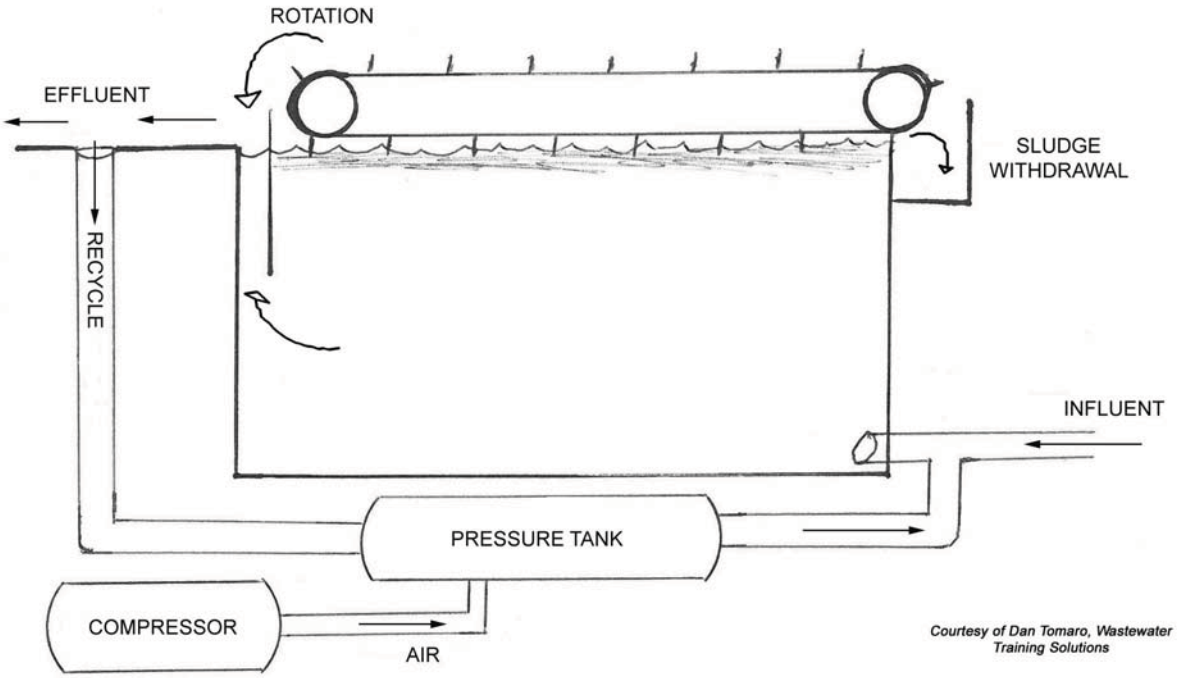

Section 3.3 - Secondary (Biological) Treatment

3.3.1 Describe common equipment used in suspended growth secondary (biological) treatment.

The purpose of secondary biological treatment is to remove dissolved and suspended organic material from wastewater to produce an environmentally-safe treated effluent and biosolids/sludge. A secondary treatment system can achieve overall BOD and suspended solids removal in the 85-95% range.

Common equipment used in suspended growth secondary biological treatment are aeration tanks, blowers, diffusers, final clarifiers, and sludge pumps.

A. Aeration Tanks
Aeration tanks are usually square, rectangular, or circular. They contain aeration equipment for providing oxygen to the microorganisms that live and grow in the tanks. Aeration equipment also provides mixing in the tank. The mixed suspension of sewage, solids, and microorganisms in the aeration tank is commonly referred to as activated sludge. The activated sludge is measured as mixed liquor suspended solids in milligrams per liter (mg/L).

B. Blowers
Mechanical blowers provide the air to the aeration tanks.

C. Diffusers
Diffusers disperse the air into the aeration tank, providing oxygen and mixing in the tank.

D. Final Clarifiers
Final clarifiers follow the aeration basins and settle the mixed liquor suspended solids. Clear effluent is discharged over and through weirs in the clarifier.

E. Sludge Pumps
The settled solids in the clarifier can be returned back to the aeration tank or wasted from the treatment system by a pump(s). The pump(s) are known as the return activated sludge (RAS) or waste activated sludge (WAS) pump(s).

3.3.2 Describe common equipment used in attached growth secondary (biological) treatment.

Attached growth systems make use of microorganisms that attach themselves to a medium or substrate of some type. Common equipment used in attached growth systems such as trickling filters and biotowers are different types of media, pumps, distribution arm and piping, and underdrains. Common equipment used in attached growth systems such as rotating biological contactors are basins, shafts, circular plastic disks, motors, and drives and sometimes blowers/diffusers (for air driven shafts).

A. Pumps and Distribution Piping
After wastewater receives primary treatment, primary effluent is collected and pumps are used to convey the wastewater to a trickling filter, a biotower distribution arm, or to RBC basins for secondary biological treatment.

B. Media
The media is the place where biological organisms and bacteria attach themselves for treatment of the incoming wastewater. Trickling filter media most commonly consists of a bed of rocks, gravel, or plastic through which the wastewater flows. Rotating biological contactors (RBC) consist of closely spaced, circular plastic disks that rotate on a shaft through the wastewater. Rocks, gravel, and disks provide surface area on which bacteria can grow.

C. Underdrain System
After wastewater flows down through a trickling filter or biotower, it is collected through a drain where some of it is recirculated back through the media by pumps for further treatment. Because of temperature difference between outside air temperature and the temperature inside the filter, natural air drafts upward through the filter media, providing oxygen.

D. RBC Motors, Drives, and Shafts
The circular plastic disks of RBCs are on a shaft that is turned by a motor/drive system.

3.3.3 List and discuss the process control equipment used for monitoring an activated sludge plant.

A. Dissolved Oxygen Meter

Used to monitor aeration basin dissolved oxygen levels. Many plants have in-line dissolved oxygen sensors to automatically control DO levels. If manual measurements are made, they should be taken in each aeration basin using a field DO probe.

B. Settleometer
Used to monitor sludge settling characteristics in 30 minutes. A 1000 mL beaker or cylinder is most commonly used. The mixed liquor suspended solids sample for this test should be collected just before it goes to the final clarifier.

C. Sludge Blanket Finder
Used to measure the depth of settled sludge in the bottom of a clarifier. A clear core sampler (Sludge Judge®) or an electronic device is most commonly used. Samples are usually collected before and after the scraper mechanism both near the well, midway, and near the sidewall. When and where the sludge depth is measured should be consistent each day.

D. Microscope
Used to observe the population and health of microorgansims living in an activated sludge system. The settled MLSS sample used for the 30-minute settling test can be used for the microscopic observation sample.

E. pH/Temperature Meter
Used to measure pHs and temperatures of wastewater entering the plant and the aeration basins.

F. Flow Meters
Used to measure influent, sidestream, RAS, WAS, and effluent flows.

3.3.4 In wastewater treatment, describe the differences between nitrification and denitrification.

Nitrification is a biological process where nitrifying bacteria convert nitrogen in the form of ammonia (NH_3) into nitrite (NO_2^-) and nitrate (NO_3^-) under aerobic conditions.Treatment plants that have ammonia limits will use nitrification to remove ammonia. Many plants that discharge to surface waters have ammonia limits to protect fish and aquatic life from ammonia toxicity.

Denitrification is a biological process where bacteria convert nitrate (NO_3^-) and nitrite (NO_2^-) to nitrogen gas (N_2) under anoxic conditions. Treatment plants that have total nitrogen limits will use denitrification to remove nitrogen.

Plants that discharge to groundwater have total nitrogen limits to protect groundwater from nitrates. Plants that remove phosphorus biologically will also employ denitrification to remove nitrates that interfere with biological phosphorus removal.

3.3.5 Explain why some treatment plants have to meet ammonia nitrogen limits.

Ammonia is toxic to fish and aquatic life and its toxicity is temperature and pH dependent. The actual limits for ammonia nitrogen are calculated based on stream flow, stream

temperature, stream pH, and the type of fishery classification.

3.3.6 Explain why some treatment plants have total phosphorus limits.

Phosphorus is one of the key nutrients that contribute to eutrophication and excess algae/plant growth in rivers and lakes. The decomposition of excess plant matter may reduce the level of dissolved oxygen in the receiving water which affects aquatic life.

3.3.7 Describe the role microorganisms have in the activated sludge process.

The principle role microorganisms have in the activated sludge process is to convert dissolved and particulate organic matter, measured as biochemical oxygen demand (BOD), into cell mass. In a conventional activated sludge process, microorganisms use oxygen to break down organic matter (food) for their growth and survival. Over time and as wastewater moves through the aeration basin, food (BOD) decreases with a resultant increase in cell mass (MLSS concentration).

3.3.8 Describe the environmental factors that influence the health and growth of microorganisms.

The activated sludge wastewater treatment process must operate under proper environmental conditions to support a healthy, growing population of microorganisms. The operator must monitor the activated sludge process to ensure the right environmental conditions are being provided for the microorganisms. Efficient wastewater treatment plant performance will then be achieved.

A. Food
Incoming wastewater to a treatment plant provides the food that microorganisms need for their growth and reproduction. This food is mostly organic material. The more soluble the organic material is, the more easily microorganisms can use it. Since the amount and type of organic loading in the treatment plant affects the growth of the microorganisms, influent total BOD and soluble BOD are measurements an operator can make to determine the amount and type of incoming food for the microorganisms.

B. Flow
Incoming wastewater must flow through a treatment plant at a rate that allows microorganisms sufficient time to consume the incoming food and to settle properly. High flows can shorten the time necessary for the full treatment of wastewater. Extremely high flows can wash microorganisms out of the plant through the final clarifier.

C. Oxygen
Conventional activated sludge is an aerobic process. Many bacteria in the activated sludge process need free oxygen (O_2) to convert food into energy for their growth. For optimal performance, it is very important for an operator to be sure enough oxygen is being provided in the aeration tanks for the microorganisms (typically 1.0-3.0 mg/L). Aeration basin dissolved oxygen concentrations (milligrams per liter) are measured continuously in many plants to ensure adequate oxygen is available.

D. Temperature
All biological and chemical reactions are affected by temperature. Microorganisms' growth

and reaction rates are slow at cold temperatures and much faster at warmer temperatures. Most microorganisms do best under moderate temperatures (10-25 ºC). Aeration basin temperatures should be routinely measured and recorded.

E. pH
Biological and chemical reactions are affected by pH. Most microorganisms do well in a pH environment between 6.0-9.0. Acidic (low pH) or alkaline (high pH) conditions can adversely affect microorganism growth and survival. Operators measure both influent pH and aeration basin pH to ensure proper plant pH conditions.

F. Nutrients
Microorganisms need trace nutrients such as nitrogen, phosphorus, and some metals for their metabolism. Most incoming wastewater to a treatment plant, especially domestic sewage, contains an abundance of these trace nutrients. The ratio of BOD5 to nitrogen (N) to phosphorus (P) should be at least 100:5:1. Influent wastewater can be measured to determine this nutrient ratio.

G. Toxicity
Incoming wastewater to a treatment plant may at times contain materials or compounds that are toxic to microorganisms. Depending on the concentration of toxic material, microorganisms could be destroyed or their metabolic rates affected, thus impairing the wastewater treatment plant efficiency.

Section 3.4 - Final Clarification

3.4.1 Explain the function of a secondary clarifier.

The secondary clarifier is a large basin or tank designed to allow organic solids to settle from effluents discharged from trickling filters, rotating biological contactors (RBC's), and/or the activated sludge process. Hydraulic overloads or operational problems in the secondary system can cause major problems in the efficiency of the secondary clarifier, because the biologic solids to be removed have a density very close to that of water.

3.4.2 Describe common equipment used in final clarification.

The purpose of final clarification is to settle secondary biological treatment solids and discharge clear effluent.

Common equipment used is:
A. Motor and Drive System
The device used to turn the surface skimmer and sludge collector.

B. Center Stilling Well
The suspended column in the center of a clarifier which provides an area for mixed liquor flow to slow down and spread out.

C. Scum Skimmer
The flat device at the surface of the clarifier which is moved by the drive system, to remove floating scum.

D. Scum Beach/Trough
The equipment used to receive the collected scum.

E. Scum Baffles
The ring or plate at the clarifiers surface that prevents scum from entering the effluent trough.

F. Effluent Weirs
Weirs that rest just below the clarifier surface which allows effluent to flow over and through into the trough.

G. Effluent Trough
The open channel on which the effluent weir is mounted and conveys the effluent.

H. Sludge Collection and Removal Mechanism
The assembly and piping arrangement at the bottom of the clarifier which is moved by the drive system and used to gather and remove settled sludge.

I. RAS/WAS Pump
A pump that returns or wastes the settled solids from the final clarifier.

Section 3.5 - Tertiary Treatment

3.5.1 Describe common equipment used in tertiary treatment.

The purpose of tertiary treatment is to provide advanced wastewater treatment beyond secondary biological treatment when the need to meet stringent effluent limits is required. Currently, the most common method of tertiary treatment is filtration. The overall efficiency in removing pollutants by filtration could exceed 95% removal of suspended solids and phosphorus. Other less used methods of tertiary treatment are carbon adsorption and physical-chemical methods.

Common equipment used in filtration are:

A. Filtering System
The filtering of very fine suspended particles in the effluent is accomplished using sand or mixed media, cloth or membranes, depending on the level of tertiary treatment needed. The filter captures fine particles as the wastewater passes through it resulting in a very clear and high quality effluent.

B. Cleaning System
As fine particles are filtered from the wastewater, eventually the particles start to plug the filter media and cleaning becomes necessary. Backwashing sand filters or cloth disks is done to re-open the filtering pore space to restore the performance of the filter. Membranes are subject to fouling and are cleaned in using one or a combination of a variety of these methods; backwashing, air sparging, relaxation and chemical clean-in-place.

Section 3.6 - Disinfection

3.6.1 Describe common disinfection processes.

The purpose of disinfection of treated wastewater is to kill and thus reduce the discharge of waterborne pathogenic organisms that cause illness, as the final step of the treatment processes. Prior to disinfection, wastewater must be treated through the headworks, aeration basins, and final clarifiers.

Common disinfection processes used are chlorination and ultraviolet (UV) radiation.

A. Chlorination

The process of chlorination uses chlorine as a gas, solid, or as a liquid. Chlorine is added to the treated wastewater as it flows through contact tanks. The contact tank gives ample time for the chlorine to react with the wastewater killing the pathogenic organisms. After the contact tanks, a chemical (usually sodium bisulfite or sulfur dioxide) is added to remove the excess chlorine. This removal is called dechlorination. Chemical feed pumps that are flow proportional are commonly used in feeding liquid chlorine (Sodium hypochlorite, a stronger version of household bleach). When feeding chlorine as a gas, special equipment is used that creates a vacuum which draws the gas into the treated wastewater.

B. Ultraviolet (UV) Radiation

The process of UV radiation uses ultraviolet light to destroy the pathogenic organism's ability to reproduce. Treated wastewater enters a channel where a stack of several ultraviolet lamps are placed either in horizontal or vertical banks. The lamps need cleaning when they become fouled (dirty).

Figure 3.6.1.1

Courtesy of South Dakota Dept. of Environment and Natural Resources

CHLORINE CONTACT TANK

Figure 3.6.1.2

ULTRAVIOLET (UV) RADIATION

Sparta WWTP

Section 3.7 - Ponds and Lagoons

3.7.1 Describe a stabilization pond system.

The purpose of pond and lagoon systems are to accomplish secondary biological treatment

in an economical way.

Ponds are lined with a clay or synthetic liner to prevent leakage to groundwater. Wastewater is pumped into one end of the pond. On the other end the flow exits through a control manhole, which may consist of stop logs or a telescopic valve, allowing the operator to control the pond depth. Most stabilization pond systems have a detention time of 150 days or greater and use more than one pond to effectively treat the wastewater.

3.7.2 Describe an aerated lagoon system.

Aerated lagoons can use surface aerators or subsurface diffusers to provide aeration and mix the wastewater. Aerated lagoons are usually deeper and have shorter detention times (60 days) to effectively treat the wastewater.

3.7.3 Discuss what photosynthesis is and how it aids the biological treatment of wastewater in stabilization ponds.

Photosynthesis is a chemical process in nature in which green plants (algae in ponds) that contain chlorophyll use carbon dioxide in the presence of sunlight to produce carbohydrates to grow. In wastewater treatment ponds, photosynthesis releases oxygen as a byproduct, providing oxygen to the bacteria that stabilize the suspended organic material in wastewater. Photosynthesis can be summarized by the equation:

Carbon dioxide + Water => Carbohydrate + Water + Oxygen
CO2 + 2H2O => CH2O + H2O + O2

Figure 3.7.3.1

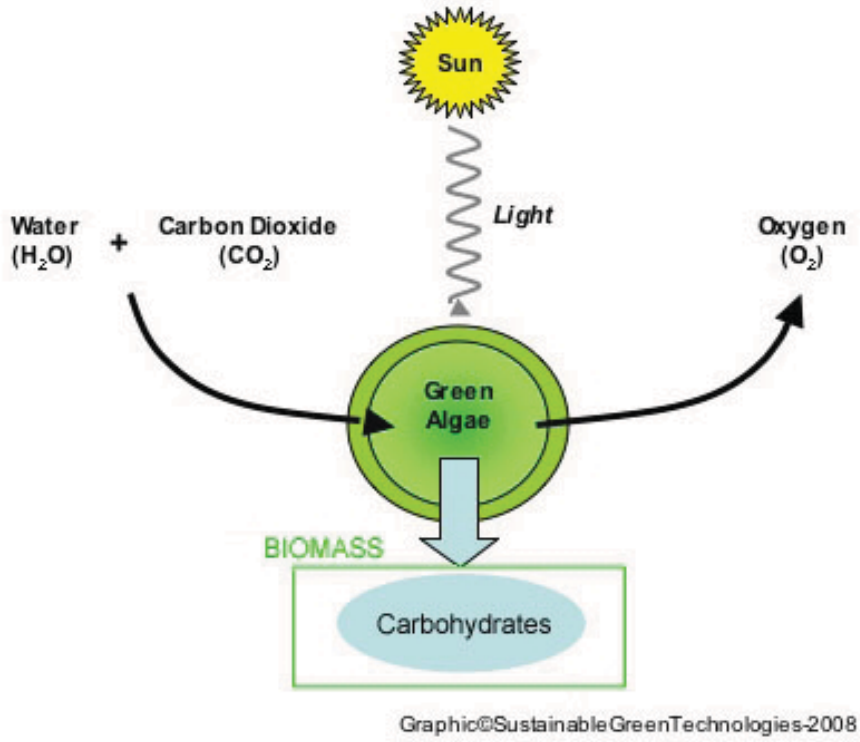

Section 3.8 - Equipment

3.8.1 List the basic components of an activated sludge system.

A. Aeration tanks
B. Blowers and diffusers or mechanical aerators
C. Clarifiers
D. RAS/WAS pumps

3.8.2 Describe the purpose of the aeration system.

The aeration system in the activated sludge provides oxygen to the microorganisms and mixes the contents of the aeration basins. The mixing brings the wastewater pollutants into contact with the microorganisms to treat the wastewater and reduce the pollutants.

3.8.3 Describe aeration equipment used in a wastewater treatment plant.

A. Blowers
Blowers provide the air that is pumped through diffusers.
1. Centrifugal: A blower consisting of an impeller fixed on a rotating shaft and enclosed in a casing having an inlet and a discharge connection.
2. Positive Displacement: A positive displacement (PD) blower forces air to move by trapping a fixed amount, then displacing that trapped volume into the discharge pipe.

B. Diffusers
1. Fine Bubble: A device through which air is pumped and divided into very small bubbles that are used to introduce and dissolve oxygen into the liquid. Fine bubble diffusers are normally disks or tubes that use membranes or ceramic materials to create the bubbles and gentle mixing action.
2. Coarse Bubble: A device through which air is pumped and divided into large bubbles that are transferred and dissolved into the liquid. Coarse bubble diffusers normally discharge air at a high rate and are installed to induce a spiral or cross roll mixing pattern.

C. Mechanical Aerators
The most common types of mechanical aerators utilize paddles or discs and spray or turbine mechanisms. By agitating the wastewater, air from the environment is introduced.

Section 3.9 - Treatment Plant and Equipment Maintenance

3.9.1 Explain what “cavitation” is, what causes it, what it sounds like, and what to do.

Cavitation occurs in wastewater systems when the vacuum pressure at any point in the system is lowered to the vapor pressure of the liquid. Under such conditions, vapor bubbles form and then collapse producing effects ranging from decreased efficiencies to equipment failure. Cavitation usually occurs in pumps, on impellers, or at restrictions in a flowing liquid. Cavitation in pumps may occur as suction cavitation or discharge cavitation.

Cavitation can make a pump very noisy. This noise has been described as a popping sound, clattering, or like marbles rattling around in the pump. Operating the pump continuously under this condition can cause pitting of the impeller and corrosion. If cavitation is occurring, contact your consultant or pump service representative to determine the cause

and corrective actions.

3.9.2 Discuss how to calibrate lift station pumps.

Pump calibration - why do it? Calibrating pumps is a way to check on wear. Regular calibration also helps determine actual flow rates and whether any plugging or infiltration is occurring.

To calibrate pumps you first must find the drawn down distance, draw down time, refill distance and refill time for each pump. Here is the way to do that:

1. Measure wet well length and width (for retangular wells) or the diameter (for circular wells).
2. Allow the pump to come on; record distance from a fixed object and the time until the pump shuts off. The distance between when the pump comes on and shuts off is called the drawdown distance. The time it takes is called the drawdown time.
3. Allow the pump to refill; record the distance and time. The distance between when the pump shuts off and when it starts again is called the refill distance. The time it takes is called the refill time.
4. Repeat steps 1-3 several times to make sure you are getting similar results.
5. Calculate the pump rate - see Key Knowledge 7.4.2.

For further information refer to the MPCA Math Workbook for Collection System Operators.

3.9.3 Discuss wastewater financial budgets in the operation, management, and upgrading of a wastewater treatment plant.

In the operation and management of a wastewater system there are four major separate budgetary items needed: Operation and Maintenance Budget, Capital Improvement Budget, Replacement Fund, and Debt Retirement. Revenues to support the operation, upgrading and management of the treatment system come from sewer use charges. Sewer use charges should be reviewed every two years and adjusted as needed. Financial management information about the treatment plant and sewer system is reported to WDNR each year in the Compliance Maintenance Annual Report.

A. Operation and Maintenance Budget
Sufficient funds must be available to cover the daily operational and maintenance expenses for the wastewater treatment plant and collection system, including salaries, electric bills for running all the equipment, lubricating pumps and drives, and cleaning sewer pipes.

B. Capital Improvements Budget or Loan
Significant upgrading or improvement projects often require large expenditures of money. Utilities should establish a capital improvements budget to plan for future treatment plant needs. Sometimes it is not possible to save enough money for a project and in those cases there are a variety of funding methods available including grants, loans, and municipal bonds.

C. Replacement Fund

Treatment plant equipment, such as pumps, motors, or aeration equipment have projected lifespans and need to be replaced when reaching the end of their design life. A replacement fund, with readily available funds, allows an operator to replace old or worn out equipment during the useful life of the treatment works to maintain the capacity and performance for which the treatment works were designed and constructed.

D. Debt Retirement
The large investment a community has to make in constructing and upgrading a wastewater treatment system often requires loans or bonds from a funding agency and/or financial institutions to be obtained and paid back over the terms of the loan.

3.9.4 Discuss the importance of routine preventative maintenance of aeration basins and clarifiers.

Aeration basins and clarifiers should be emptied on a regular basis to:

A. Perform a detailed inspection of the structure, valves, and control gates
B. Clean out grit and settled solids
C. Maintain equipment and piping.

When emptying aeration basins and clarifiers, an operator should be aware of structural and operational effects. Notify WDNR of scheduled maintenance activities as given in the standard conditions of the WPDES permit.

3.9.5 List the items to include in a maintenance schedule for final clarifiers.

An operator should consult the O&M Manual for the preventative maintenance schedule. Daily observations should be performed such as checking for oil leaks, unusual vibrations or noises, scum collection, weirs, and floating solids. All maintenance and repairs should be documented.

Chapter 4 - Biosolids/Sludge - Processing, Handling, and Land Application

Section 4.1 - Thickening

4.1.1 Compare the sources and characteristics of primary and secondary biosolids/sludges.

Primary sludges are the solids that settle out of the raw wastewater in the primary clarifiers. The primary sludges are usually fairly coarse with a specific gravity (density) significantly greater than water, allowing for rapid settling. Primary sludges are typical 60-80% volatile solids (organic) varying depending on the raw wastewater characteristics. Primary sludge is odorous and requires additional treatment prior to ultimate disposal.

Secondary sludges are those solids generated as a part of the secondary treatment process and settle out in the secondary clarifiers. These sludges are mainly composed of the microorganisms generated in the secondary process (activated sludge or fixed film systems). Excess sludge amounts must be removed to keep the secondary system in balance. Secondary sludges are more flocculent, with a specific gravity (density) very close to that of water making them more difficult to settle than primary sludges. Secondary sludges are 75 to 80 percent volatile solids (organic) and contain bound water in the cells of

the microorganism, making them difficult to dewater or thicken. Chemical additions can be used to enhance dewatering. The higher the volatile solids (organics) content, the more difficult the sludge is to dewater.

Both primary and secondary sludges should be as concentrated as possible by proper operation of clarifiers. At times, additional thickening is used to reduce the amount of water and volume loading on subsequent sludge treatment processes. Chemical additions can be used to enhance dewatering. The higher the volatile solids (organics) content, the more difficult the sludge is to dewater.

4.1.2 Describe common biosolids/sludge thickening unit processes and how they work.

The purpose of sludge thickening is to further concentrate and thicken solids settled and wasted from treatment plant processes. Sludge is thickened prior to being pumped to the digester or sludge storage. Common sludge thickening unit processes are:

A. Gravity Settling Thickener

Gravity thickening consists of a circular tank (usually with a conical bottom) that is fitted with collectors or scrapers at the bottom. Primary and/or secondary solids are fed into the tank through a center well, which releases the solids at a low velocity near the surface of the tank. The solids settle to the bottom of the tank by gravity, and the scrapers slowly move the settled, thickened solids to a discharge pipe at the bottom of the tank.

B. Dissolved Air Flotation

Dissolved air flotation thickens sludge by adding dissolved air under pressure and then releasing the air at atmospheric pressure in a flotation tank or basin. The released air forms tiny bubbles which adhere to the suspended matter causing the suspended matter to float to the surface where it is removed by a skimming device. See figure 3.2.1.3.

Figure 4.1.2.1

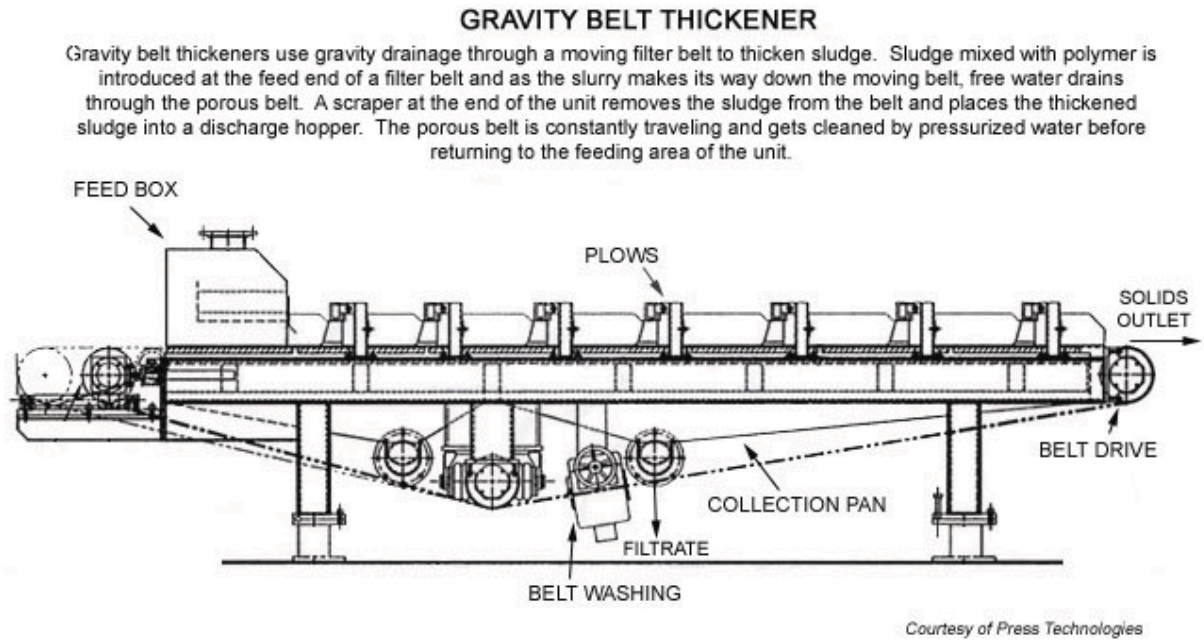

Figure 4.1.2.2

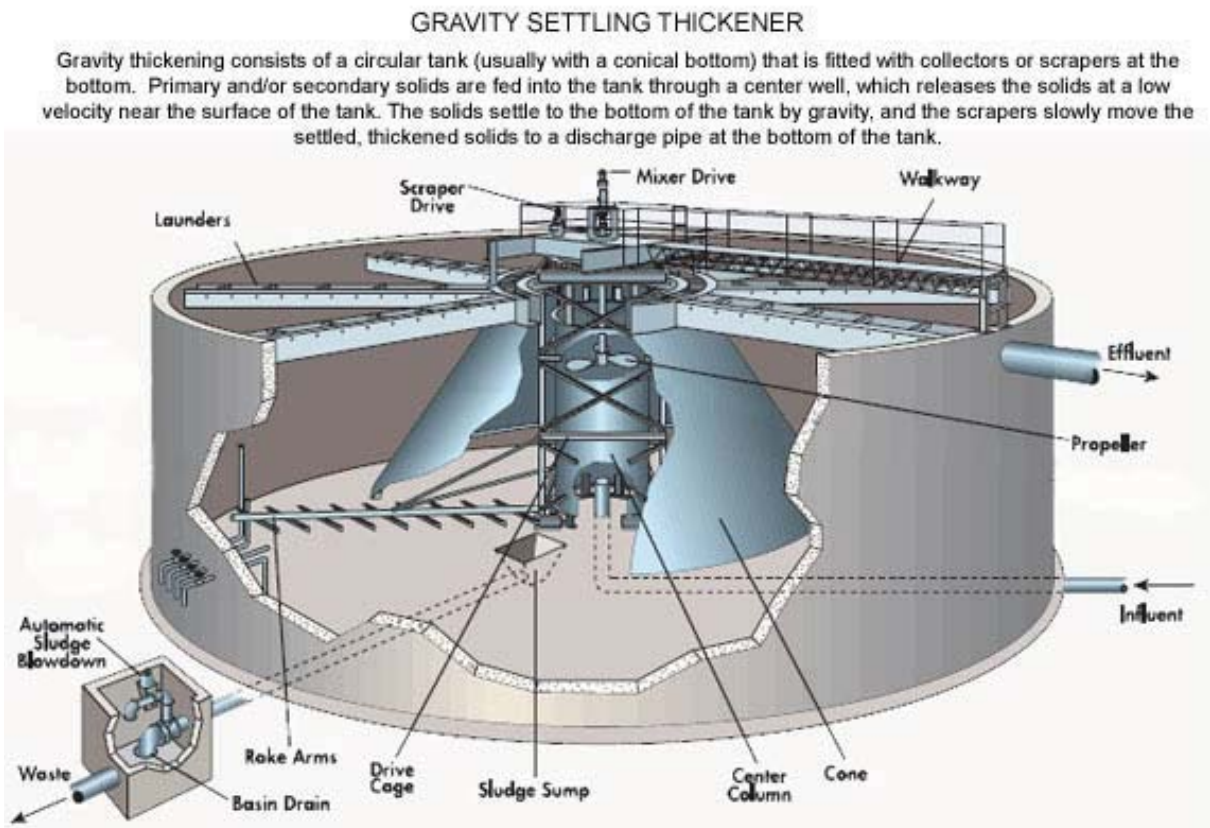

Section 4.2 - Treatment

4.2.1 Discuss biosolids/sludge treatment processes used to significantly reduce fecal coliform bacteria and meet the pathogen control criteria.

The purpose of sludge treatment, sometimes also referred to as sludge stabilization, is to reduce the pathogens in the sludge and the attraction of vectors (flies, mosquitos, vermin, birds, etc.).

Class B sludges are sludges that can be applied to agricultural lands. Adequate pathogen control for a Class B sludge is < 2,000,000 CFU/g or mpn fecal coliforms or by one of the following methods below. Certain sludge treatment processes are able to significantly reduce fecal coliform bacteria and meet these criteria in Wisconsin.

A. Anaerobic Digestion
Sludge is treated in the absence of air for a certain amount of time at a specific temperature. The time and temperature shall be between 15 days at 35 °C to 55 °C and 60 days at 20 °C.

B. Air Drying
Sludge is dried on sand beds or on paved or unpaved basins for a minimum of 3 months. During 2 of the 3 months, the average daily temperature has to be above 0 °C.

C. Composting
Sludge is composted using either a within-vessel, static aerated pile, or windrow composting method and the temperature of the sludge raised to 40 °C or higher for 5 days. For 4 hours during the 5 days, the temperature in the compost pile has to exceed 55 °C.

D. Alkaline Stabilization
Lime is added to sludge to raise the pH to 12 for 2 hours of contact.

E. Process to Significantly Reduce Pathogens (PSRP) Equivalent
Sludge is treated in a process that is equivalent to a process to significantly reduce pathogens, as approved by the department. Many such processes are proprietary.

Section 4.3 - Dewatering

4.3.1 Describe common mechanical biosolids/sludge dewatering units and how they work.

The purpose of dewatering sludge is to significantly concentrate the solids and reduce the liquid content of the sludge.

Figure 4.3.1.1

Courtesy of Phoenix Process Equipment

BELT PRESS

A mechanical arrangement of rollers and permeable mesh belts, in which water is removed from sludge using pressing force, and with the aid of polymer.

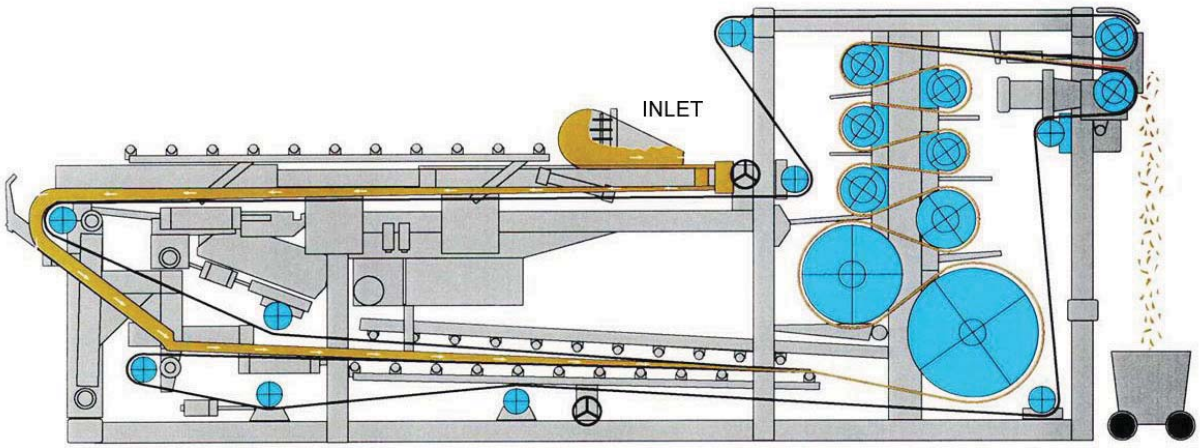

Figure 4.3.1.2

PLATE AND FRAME (FILTER) PRESS

A mechanical arrangement of metal plates and hydraulic cylinders, in which water is removed from sludge using pressing force, and with the aid of polymer or lime.

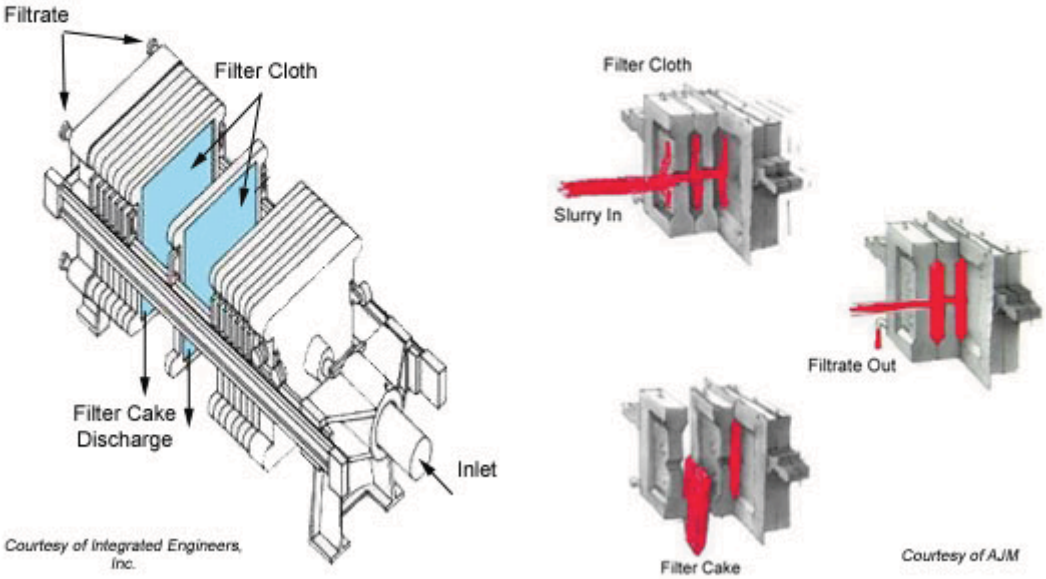

Figure 4.3.1.3

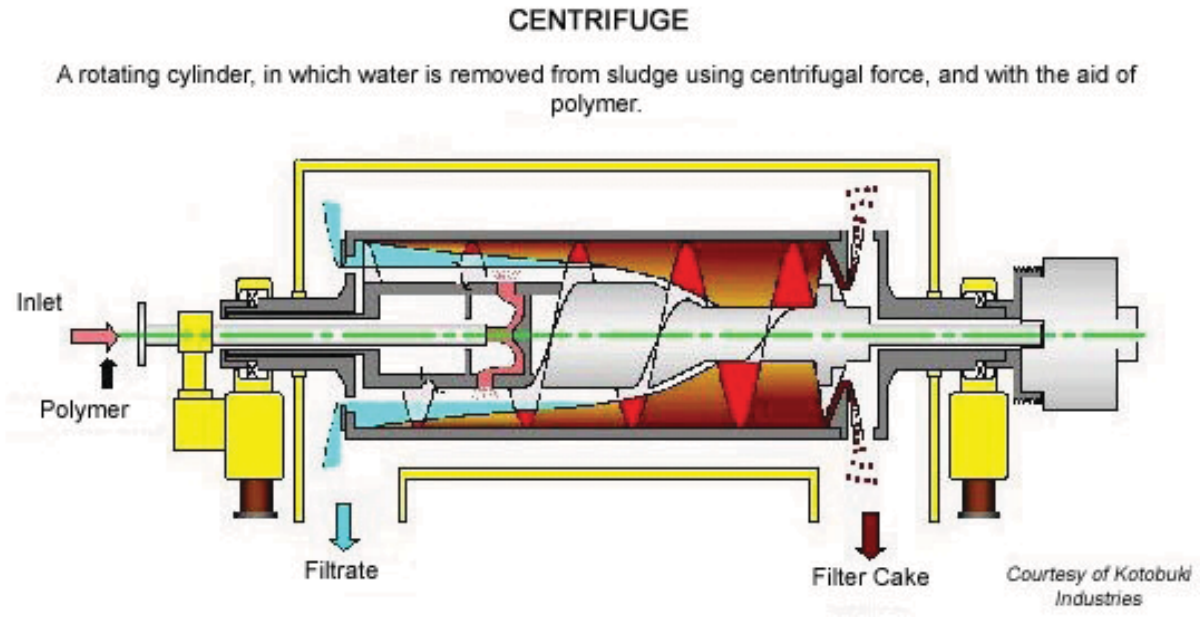

Section 4.4 - Land Application

4.4.1 Discuss the importance of recycling biosolids/sludge through land application.

EPA defines biosolids as a "primarily organic solid product yielded by municipal wastewater treatment processes that can be beneficially recycled" as soil amendments (fertilizer and conditioners). Recycling biosolids through land application is a sustainable management method to reuse nutrients and soil conditioners in place of commercial fertilizers, and avoid disposal in landfills.

Section 4.5 - Sampling and Reporting

4.5.1 Compare activated sludge solids results expressed as milligrams per liter (mg/L) and % solids.

In activated sludge aeration basins, mixed liquor suspended solids is expressed in milligrams per liter (mg/L) . As solids are thickened and the concentration gets to 10,000 mg/L or above, the solids are then often expressed as a percent. Every 10,000 mg/L is 1% and can be expressed as follows:

10,000 mg/L = 1.0 % solids
15,000 mg/L = 1.5 % solids
20,000 mg/L = 2.0 % solids
25,000 mg/L = 2.5 % solids
30,000 mg/L = 3.0 % solids

4.5.2 Discuss the records an operator must keep when biosolids/sludge is landspread.

A treatment plant operator has to maintain a daily application log for biosolids land applied each day when land application occurs. The following minimum records must be kept, in

addition to all analytical results for the biosolids land applied.

The daily log must include the following information:

A. Approved site used
B. Number of acres of sludge applied on that day
C. Amount of sludge applied that day and amount per acre
D. Amount of nitrogen applied per acre
E. Method of application of the sludge (injection, incorporation, or surface application)

Chapter 5 - Effluent Discharge

Section 5.1 - Flow Monitoring

5.1.1 There are currently no key knowledges for this section.

Section 5.2 - Sampling

5.2.1 Discuss samples and lab testing for sending to certified labs.

When sending samples to a certified lab one must make sure that:

A. The lab is certified in the test you are submitting your sample.
B. The sample will get there in the appropriate time. For example: Grab samples for pH cannot be sent out due to the holding time requirements and BOD samples must be tested at the certified lab no later than 48 hours after the last composite sample was taken.
C. The paperwork is filled out completely. Certified labs will provide you with a chain of custody form that has all the necessary data needed.
D. The samples are on ice when needed and that the temperature of the samples meet the specific requirements when they reach the certified lab.

5.2.2 Describe how to set an automatic sampler.

An automatic sampler takes a series of small samples throughout the day and stores it in a large container. The large container is in a refrigerator to preserve the sample while collecting it. At the end of 24 hours, you have a 24 hour composite sample.

The DNR usually specifies “flow proportional” composite samples, which means the automatic sampler receives a signal from a flow meter, and takes a sample every so many gallons of flow.

In order to set up an automatic sampler to take a 24 hour flow proportional sample, you need to adjust two settings. The first setting determines the sample size (aliquot), and the second setting determines how often the sampler takes a sample (interval). During normal flows, for example set up the sampler to take 100 samples per day and wind up with the sample container about half full.

Example: An operator wants to take a 24 hour flow proportional sample. The flow is

500,000 gpd, and the sample container holds 20 liters.

Solution: The operator wants to take 100 samples per day and wind up with 10 liters of sample. 10 liters = 10,000 mL, so:
10,000 mL ÷ 100 samples = 100 mL/sample

So the operator can set the sample size (aliquot) to 100 mL. To determine the interval, divide the daily flow by the number of samples:
500,000 gpd ÷ 100 samples/day = 5000 gals/sample

So the operator can set the interval to 5,000 gallons.

Section 5.3 - Permitting and Reporting

5.3.1 List and describe what is in a Wisconsin Pollutant Discharge Elimination System (WPDES) permit.

A WPDES permit allows you to discharge treated wastewater from a wastewater treatment plant to a specified receiving water or land area in accordance with the effluent limitations, monitoring requirements and other conditions set forth in the permit. A WPDES permit contains the following sections:

A. Influent Requirements
This section of the permit lists the specific influent sampling points and associated monitoring requirements at each point. This provides how much flow and pollutants are coming into the plant.

B. Surface Water or Land Disposal Requirements
This section of the permit lists the specific effluent sampling points with associated monitoring requirements and effluent limitations at each point. This provides information on treatment efficiency and the amount and quality of the treated wastewater being discharged from the plant.

C. Land Application Requirements
This section of the permit lists the specific sampling points and associated monitoring requirements and limitations at each point. This provides information on the biosolids/sludge that is hauled from the plant and landspread.

D. Schedules of Compliance
This section of the permit establishes a time schedule for any reports, upgrading construction requirements or other actions to be met by the permittee.

E. Standard Requirements
This section of the permit contains the more general requirements regarding wastewater reporting and monitoring, system operations, surface water discharge, and land application.

F. Summary of Reports Due
The end of the permit contains a table that lists and summarizes all the reports that must be

submitted and when they are due. Many operators copy this page and post it for ready reference.

5.3.2 Describe a Discharge Monitoring Report (DMR).

A Discharge Monitoring Report is an electronic submittal required by DNR, which includes routine monitoring data from a wastewater facility primarily to determine compliance with permit limits. The monitored parameters and frequencies are outlined in the facility's WPDES permit. These reports are submitted electronically to WDNR on a monthly basis, but some facilities submit them quarterly. Monthly discharge monitoring reports are due on the 15th of the following month.

Figure 5.3.2.1

Wastewater Discharge Monitoring Long Report

Facility Name: Activated Sludge Wastewater Treatment Plant
Contact Address: N 021 Filamentous Way
Flushing, WI 53000
Facility Contact: Mary Vorticella, Operator
Phone Number: (608)555-1234
Reporting Period: 01/01/2012 - 01/31/2012
Form Due Date: 02/15/2012
Permit Number: 0123456

For DNR Use Only

Date Received:
DOC:
FIN:
FID:
Region: South Central Region
Permit Drafter: Phillip A. Spranger
Reviewer: Amy M Schmidt
Office: Fitchburg

	Sample Point	701	701	001	001	001
	Description	INFLUENT	INFLUENT	EFFLUENT	EFFLUENT	EFFLUENT
	Parameter	66	457	211	66	457
	Description	BOD5, Total	Suspended Solids, Total	Flow Rate	BOD5, Total	Suspended Solids, Total
	Units	mg/L	mg/L	MGD	mg/L	mg/L
	Sample Type	24 HR FLOW PROP	24 HR FLOW PROP	CONTINUOUS	24 HR FLOW PROP	24 HR FLOW PROP
	Frequency	2/WEEK	2/WEEK	CONTINUOUS	2/WEEK	2/WEEK
Sample Results	**Day 1**					
	2					
	3					
	4					
	5					
	6					
	7					
	8					
	9					
	10					

5.3.3 Discuss the requirements for reporting a Sanitary Sewer Overflow (SSO).

Whenever there is an overflow occurrence at the treatment works or from the collection system, the permittee must notify the Department within 24 hours of initiation of the overflow occurrence by telephoning the wastewater staff in the regional office as soon as reasonably possible (FAX, email or voice mail, if staff are unavailable). In addition, the permittee shall within 5 days of conclusion of the overflow occurrence report pertinent SSO information in writing on a SSO reporting form provided by the Department.

Chapter 6 - Safety

Section 6.1 - Management of Wastewater Treatment Plants

6.1.1 Discuss preventative spill measures and procedures when handling hazardous chemicals.

Storage tanks must have secondary containment that equals the volume of the storage tank. During unloading of delivery vehicles, place containment pails under potential leak points and when uncoupling fill lines. Inspect and maintain fill lines and valves. Inspect storage tanks and hardware for integrity. Pay attention to what you are doing!

Provide on-site containment equipment such as absorbent booms, sandbags, etc. and seal your yard/storm drains to prevent off-site loss of chemical.

Chapter 7 - Calculations

Section 7.1 - Sampling

7.1.1 Given the average daily plant flow, calculate the programming of a flow proportional sampler to collect the correct number and volume of samples.

GIVEN:
Average daily flow = 850,000 gallons
24 hour composite volume desired = 5000 mL
Sample container size = 10 liters
Samples/day = 100

FORMULAS & SOLUTION:
Flow interval (gals/sample) = average daily flow (gpd) ÷ # of samples/day
Volume of sample (mL) = 24 hour composite volume (mL) ÷ # of samples/day

Flow interval (gals/sample) = 850,000 gpd ÷ 100 samples/day
= 8500 gal/sample

Volume of sample (mL) = 5000 mL ÷ 100 samples/day
= 50 mL

Section 7.2 - Tank Volume

7.2.1 Given data, determine if an unused circular tank at a treatment plant can be used for 180 day sludge storage. The volume of sludge generated each day is 2500 gallons and the tank is 20 feet deep with a diameter of 50 feet.

GIVEN:
Tank depth = 20 feet
Tank diameter = 50 feet
Gallons of sludge wasted each day = 2500 gallons

FORMULAS & SOLUTION:
Sludge Volume Needed = 2500 gallons/day × 180 days
= 450,000 gallons

Tank Volume = [3.14 × (radius squared (ft)) × depth (ft)] × 7.48 gal/cu.ft
= [3.14 × (25 ft × 25 ft) × 20 ft] × 7.48 gal/cu.ft
= 293,590 gallons

Since the sludge wasted that needs to be stored over 180 days is 450,000 gallons and the tank is only 293,560 gallons, the tank by itself is too small to be used for 180 days of storage.

7.2.2 Given data, during wet weather, determine if a chlorine contact tank is of sufficient volume to meet a 30 minute detention time at peak hourly flow.

GIVEN:
Tank depth = 15 feet
Tank length = 20 feet
Tank width = 15 feet
Peak hourly flow = 35,000 gal/hour
Detention time needed = 30 minutes

FORMULAS & SOLUTION:
Tank volume (gallons) = [length (ft) × width (ft) × depth (ft)] × 7.48 gal/cu.ft.
Detention time (minutes) = [tank volume (gal) ÷ flow rate (gal/hour)] × 60 minutes/hour

Tank volume (gallons) = [20 ft × 15 ft × 15 ft] × 7.48 gal/cu.ft.
= 33,660 gallons

Detention time (minutes) = [33,660 gallons ÷ 35,000 gal/hour] × 60 minutes/hour
= 0.96 hours × 60 minutes/hour
= 57 minutes

YES, the chlorine contact is able to meet the 30 minute detention time during wet weather peak hourly flow.

Section 7.3 - Pounds Formula

7.3.1 Given data, calculate the pounds of BOD5 entering the treatment plant each day.

GIVEN:
Influent flow = 0.845 MGD
Influent BOD = 320 mg/L
1 gallon = 8.34 lbs

FORMULA & SOLUTION:
Influent BOD5 (lbs/day) = influent flow in MGD × influent BOD5 in mg/L × 8.34 lbs/gal
= (0.845 MGD) × (320 mg/L) × 8.34 lbs/gal
= 2255 lbs/day

7.3.2 Given data, determine the food to microorganism ratio (F/M) in the aeration basin of an activated sludge treatment plant.

In an activated sludge plant, food to microorganism ratio is the amount of food (BOD5 in lbs) relative to the amount of biomass (mixed liquor suspended solids in lbs) in the aeration basin.

GIVEN:
Influent flow (MGD) = 0.125 MGD
Influent BOD5 (mg/L) = 280 mg/L
Aeration basin volume = 0.200 MG
Aeration basin MLSS = 2100 mg/L
1 gallon = 8.34 lbs

FORMULA and SOLUTION:
F/M Ratio = pounds of incoming BOD5 ÷ pounds of MLSS under aeration
F/M Ratio = [(influent flow in MGD) × (influent BOD5 in mg/L) × 8.34 lbs/gal]
divided by
[(aeration basin volume in MG) × (MLSS in mg/L) × 8.34 lbs/gal]
= [(0.125 MGD) × (280 mg/L) × 8.34 lbs/gal] ÷ [(0.2 MG) × (2100 mg/L) × 8.34 lbs/gal]
= 292 lbs BOD5 ÷ 3503 lbs MLSS
= 0.08

Section 7.4 - Pump Rate

7.4.1 Given data, calculate the size of an emergency (trash) pump that will be needed to pump to a downstream manhole during a power outage at a lift station wet well to avoid a sewage overflow or basement backup.

GIVEN:
Size of lift station wetwell = 10 ft × 10 ft
Depth of wetwell = 15 ft
Fill time of wet well during storm = 10 minutes
1 cubic foot = 7.48 gallons

FORMULAS and SOLUTION:
Wetwell volume (gallons) = [length (ft) × width (ft) × depth (ft)] × 7.48 gal/cu.ft
Sewage flow (gpm) = wetwell volume (gal) ÷ fill time (mins)

Wetwell volume (gal) = [10 ft × 10 ft × 15 ft] × 7.48 gal/cu.ft
= 1500 cu.ft × 7.48 gal/cu.ft
= 11,220 gallons

Sewage flow (gpm) = 11,200 gallons ÷ 10 minutes
= 1,120 gpm

----> USE AT LEAST A 1500 gpm pump

7.4.2 Given data, calculate the pump rate in gallons per minute of this lift station pump.

GIVEN:
Wet well diameter = 7 feet

Drawdown time = 250 seconds
Drawdown distance = 1.33 feet
Refill time = 400 seconds
Refill distance = 1.25 feet
1 cubic foot = 7.48 gallons
60 seconds = 1 minute

FORMULA & SOLUTION:
Pump rate (gpm) = [volume of drawdown (gal) ÷ time (min)] + [volume of refill (gal) ÷ time (min)]
Pump rate (gpm) = [(3.14 × radius squared (ft) × drawdown (ft) × 7.48 gal/cu.ft) ÷ (drawdown time (sec) ÷ 60 sec/min)] + [(3.14 × radius squared (ft) × refill (ft) × 7.48 gal/cu.ft) ÷ (refill time (sec) ÷ 60 sec/min)]

Pump rate (gpm) = [(3.14 × (3.5 ft × 3.5 ft) × 1.33 ft × 7.48 gal/cu.ft) ÷ (250 sec ÷ 60 sec/min)] + [(3.14 × (3.5 ft × 3.5 ft) × 1.25 ft × 7.48 gal/cu.ft) ÷ (400 sec ÷ 60 sec/min)]
= [383 gals ÷ 4.2 mins] + [360 gals ÷ 6.7 mins]
= 91 gpm + 54 gpm
= 145 gpm

Section 7.5 - Detention Time

7.5.1 Given data, calculate detention time for multiple clarifiers operating in parallel.

GIVEN:
Primary clarifiers = 2
Clarifier diameter = 80 feet
Clarifier depth = 12 feet
Average daily flow = 7.2 MGD
1 cubic foot = 7.48 gallons
Note: both clarifiers receive equal flows

FORMULA & SOLUTIONS:
Volume (gal) = # of clarifiers × (3.14 × [radius squared (ft)] × height (ft) × 7.48 gal/cu.ft)
Detention time = tank volume (gal) ÷ flow rate (gal/hour)

Volume (gal) = 2 clarifiers × (3.14 × [40 ft × 40 ft] × 12 ft) × 7.48 gal/cu.ft
= 901,908 gallons

Detention time = 901,908 gallons ÷ [7,200,000 gpd ÷ 24 hours/day]
= 901,908 gallons ÷ 300,000 gal/hour
= 3 hours

Note: this can also be calculated by using the volume of 1 clarifier and dividing the flow by 2.

Section 7.6 - Percent Removal

7.6.1 Given data, calculate the percent of BOD5 being treated and removed.

GIVEN:
Influent flow = 1.2 MGD
Influent BOD5 = 240 mg/L
Effluent flow = 1.2 MGD
Effluent BOD5 = 10 mg/L
1 gallon = 8.34 lbs

FORMULA & SOLUTION:
BOD5 removed (lbs) = influent BOD5 (lbs) - effluent BOD5 (lbs)
BOD5 removed (lbs) = [(influent flow in MGD) × (influent BOD5 in mg/L) × 8.34 lbs/gal] minus
[(effluent flow in MGD) × (effluent BOD5 in mg/L) × 8.34 lbs/gal]

Percent (%) removal = [(influent BOD (lbs) - effluent BOD (lbs)) ÷ influent BOD (lbs)] × 100

BOD5 removed (lbs) = [(1.2 MGD) × (240 mg/L) × 8.34 lbs/gal] - [(1.2 MGD) × (10 mg/L) × 8.34 lbs/gal]
= 2400 lbs - 100 lbs
= 2300 lbs BOD5 removed

Percent (%) Removal = [(2400 lbs - 100 lbs) ÷ 2400 lbs] × 100
= (2300 lbs ÷ 2400 lbs) × 100
= 96%

References and Resources

1. **OPERATION OF MUNICIPAL WASTEWATER TREATMENT PLANTS (2008)**

   MANUAL OF PRACTICE NO. 11 (6TH EDITION), VOLUME 2 – LIQUID PROCESSES. WATER ENVIRONMENT FEDERATION. MCGRAW HILL PUBLISHERS.

   www.wef.org

2. **OPERATION OF WASTEWATER TREATMENT PLANTS – A FIELD STUDY TRAINING PROGRAM (2002)**

   5TH EDITION. CALIFORNIA STATE UNIVERSITY –SACRAMENTO, OFFICE OF WATER PROGRAMS

   http://www.owp.csus.edu/ or available through inter-library loan at http://aqua.wisc.edu/waterlibrary

3. **A DROP OF KNOWLEDGE - THE NON-OPERATOR'S GUIDE TO WASTEWATER SYSTEMS (2011)**

   RURAL COMMUNITY ASSISTANCE PARTNERSHIP, INC.

   www.rcap.org

4. **ISCO OPEN CHANNEL FLOW MEASUREMENT HANDBOOK (2011)**

   6th EDITION. ISCO, INC. P.O. BOX 82531 LINCOLN, NE. iscoinfo@teledyne.com

   www.isco.com/flowbook

5. **MATH WORKBOOK FOR COLLECTION SYSTEM OPERATORS (2008)**

   Minnesota Pollution Control Agency, 520 Lafayette Road North, St. Paul, MN 55155

   http://www.pca.state.mn.us/

6. **STANDARD METHODS FOR THE EXAMINATION OF WATER AND WASTEWATER**

   22ND EDITION. AMERICAN PUBLIC HEALTH ASSOCIATION, AMERICAN WATERWORKS ASSOCIATION, & WATER ENVIRONMENT FEDERATION.

   http://www.standardmethods.org/